State of Alaska

Department of Transportation and Public Facilities

Design and Engineering Services Division-Southeast Region

JUNEAU BRIDGE REPAIR & UPGRADE
BASIN ROAD TRESTLE BRIDGE NO. 948
PROJECT No. 68979/BR-0003(144)

JUNEAU, ALASKA

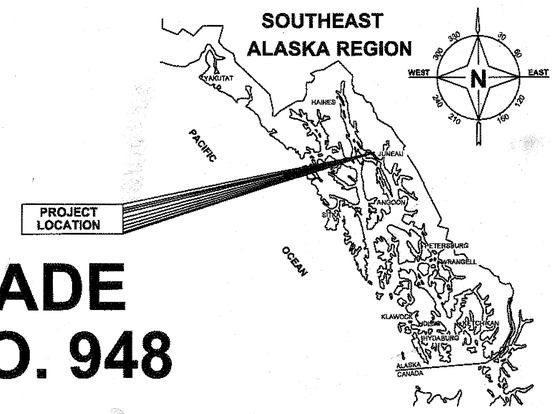

PROJECT LOCATION

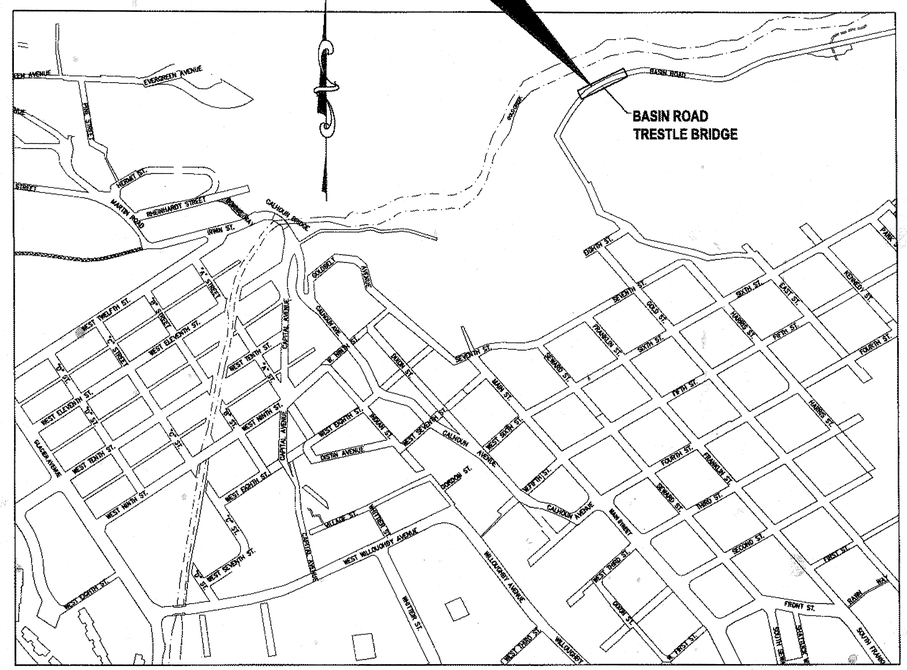

VICINITY MAP

As Built Plans John D. Kajdan 3/18/2015

CONTRACTOR: SILVER BOW CONSTRUCTION, Jeremy Adam Project Manager
Pete Abrahms Project Superintendent

PROJECT ENGINEER: JOHN KAJDAN

Start of construction: 9/3/2011

Project complete: 5/8/2013

PROJECT CONSISTS OF:

REMOVAL OF EXISTING BRIDGE RAIL, BRIDGE DECK, DETERIORATED STRINGERS, CAP BEAMS, COLUMNS AND CROSS-BRACING.
REPAIR OR REPLACEMENT OF DETERIORATED COLUMNS, CAP BEAMS, FOOTINGS AND STRINGERS
CONSTRUCTION OF A NEW STRUCTURAL DECK, NEW RAILING AND NEW RUNNING DECK AND RESTORATION OF APPROACHES.

THE FOLLOWING STANDARD DRAWINGS APPLY TO THIS PROJECT:

S-00.10	G-00.01
S-01.00	G-04.07W
S-05.01	G-10.01
S-20.10	G-30.00
S-30.03	

1/83 pages

PLANS PREPARED BY
PND ENGINEERS, INC.

PROJECT INDEX

SHEET NO.	DESCRIPTION
A1	TITLE SHEET
A2	ESTIMATE OF QUANTITIES &
	WORK SUMMARY
A3	GENERAL NOTES
N0.1 - N0.2	OVERALL PLAN AND TYPICAL SECTION
N1.1 - N1.4	EROSION/SEDIMENT CONTROL /
	EXCAVATION PLANS
N2.1 - N2.6	DEMOLITION PLANS
N3.1 - N3.5	FRAMING PLANS
N4.1 - N4.4	DECK PANEL PLANS
N4.5 - N4.18	DECK PANEL LAYOUT
N5.1 - N5.8	RAIL PLANS / ELEVATIONS
N6.1 - N6.6	CROSS - BRACING
N7.1	UTILITY PLAN AND DETAIL
S1.0	TRAFFIC CONTROL PLAN
S2.0	SNOW REMOVAL PLAN
S3.0	SIGNAGE PLAN

PATH: N:\09XXX\092025 BASIN ROAD TRESTLE\D- DRAWINGS\PND\FINAL DESIGN\A1_A2_A3_S1.DWG TAB:A1

PLOT: PSPACE OR MSPACE: 1=1(F)

STATE OF ALASKA
DEPARTMENT OF TRANSPORTATION & PUBLIC FACILITIES
DESIGN & ENGINEERING SERVICES DIVISION-SOUTHEAST REGION

STATE OF ALASKA — Christopher Bianchi — Jan 24, 2011 — CE-7539 — REGISTERED PROFESSIONAL ENGINEER

APPROVED: Charles W. Correa 1/31/11
REGIONAL PRE-CONSTRUCTION ENGINEER — DATE
CHARLES W. CORREA, P.E.

APPROVED: 1-31-11
DIRECTOR, SOUTHEAST REGION — DATE
GARY L. DAVIS

CERTIFIED TRUE & CORRECT AS-BUILT OF ACTUAL FIELD CONDITION:

3/18/2015
CONSTRUCTION PROJECT MANAGER — DATE

STATE	PROJECT DESIGNATION	YEAR	SHEET NO.	TOTAL SHEETS
ALASKA	68979/BR-0003(144)	2010	A1	58

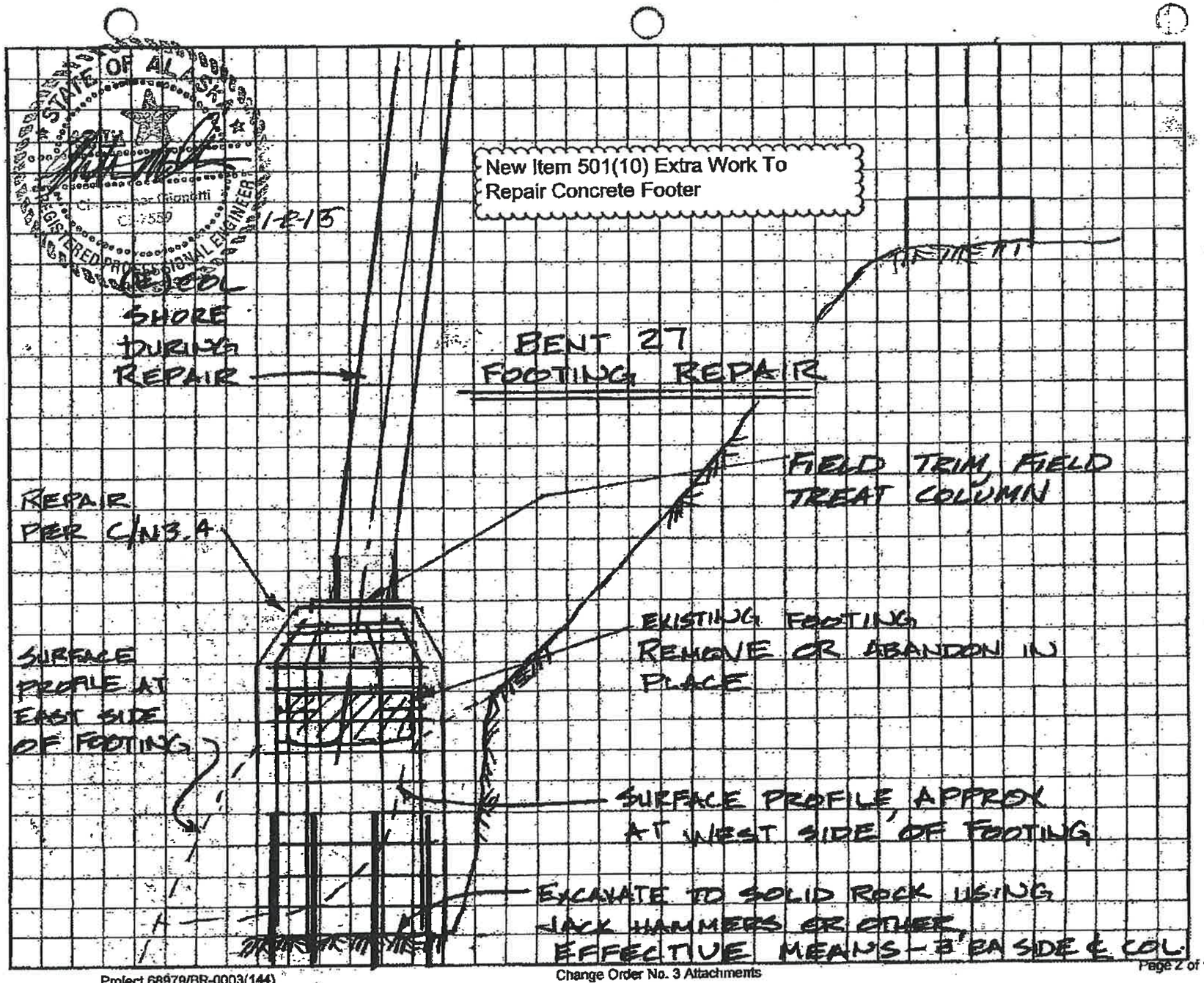

9360 Glacier Highway, Suite 100
Juneau, Alaska 99801
phone 907.586.2093
fax 907.586.2099

Project: BASIN ROAD TRESTLE
Sheet Number: 1 Of: 1
Calculated by: CG Date: 10-17-11
Checked by: _____ Date: _____

JSK 2/12/13

12/21

4/83

New Item 501(10) Extra Work To
Repair Concrete Footer

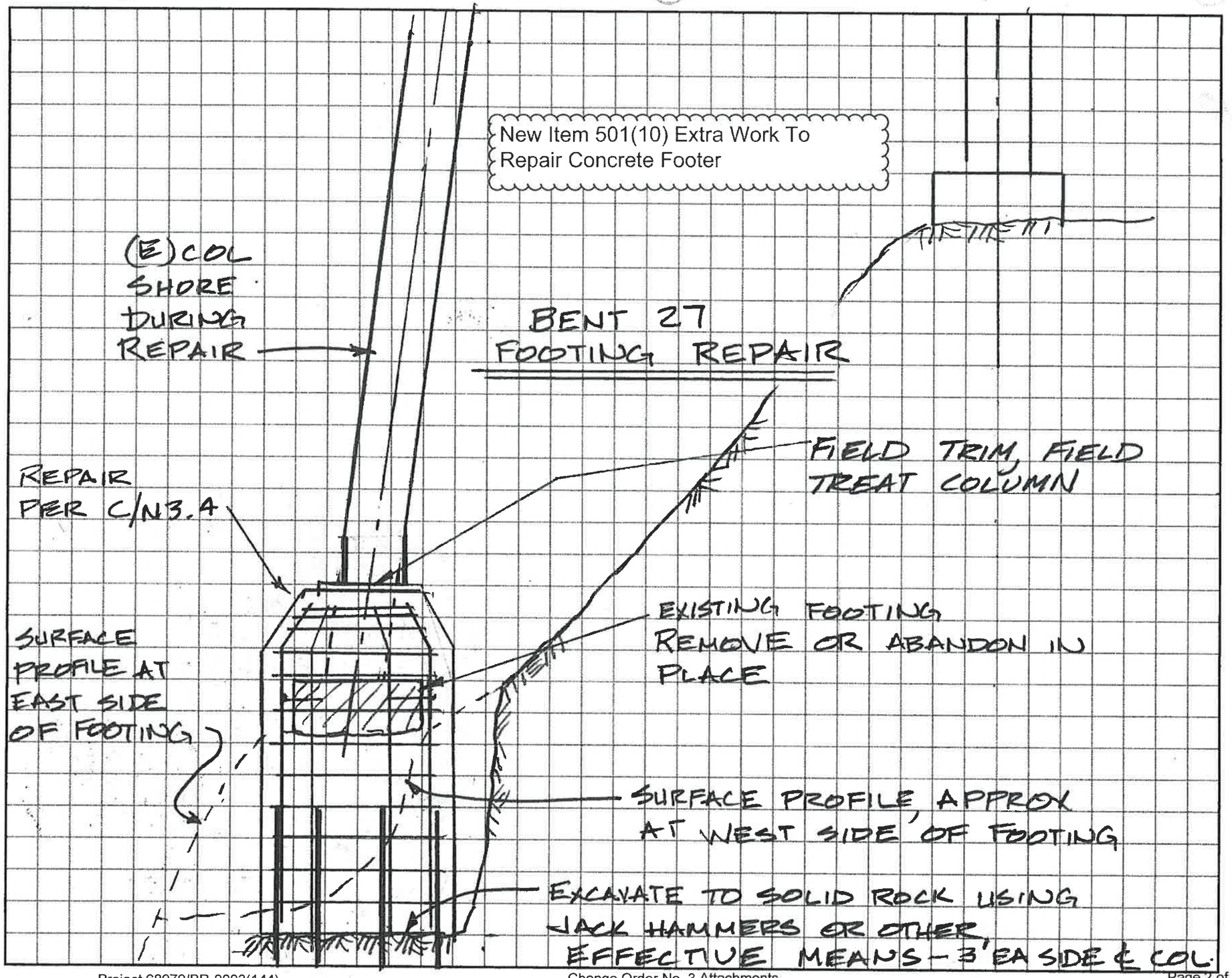

P | N | D
9360 Glacier Highway, Suite 100
Juneau, Alaska 99801
phone 907.586.2093
fax 907.586.2099

JSK 2/12/13

Project: BASIN ROAD TRESTLE
Sheet Number: 1 Of: 1
Calculated by: CG Date: 10-17-11
Checked by: _____ Date: _____

5/23

New Item 506(14) Added Timber Connections

STATE OF ALASKA DOT&PF SOUTHEAST REGION	DESIGN CLARIFICATION VARIATION REQUEST	

PROJECT NO: 68979/BR-0003(144)	PROJECT: JNU-BASIN ROAD TRESTLE REPAIR	
PROJECT MANAGER: JOHN KAJDAN	RESIDENT ENGINEER: CHUCK CORREA	
CONTRACTOR: SILVER BOW CONSTRUCTION CO.	CHRISTOPHER GIANOTTI	
TO: JOHN KAJDAN	■ STRUCTURAL	☐ ELECTRICAL
FROM: JEREMY ADAM	☐ ARCHITECTURAL	☐ PLUMBING
DCVR #: 7 / DATE REQ'D: ASAP	☐ MECHANICAL	

REQUEST:

Column to Cap Beam Plates: Sheets N6.1 to N6.6 show a bracket tying columns to cap beams. Alternate bents have brackets installed on middle and uphill end columns with none on downhill columns. Bents in between alternate bents have no brackets/plates at all tying columns to cap beams (total of 80 locations). Please advise on whether the State wants a price to install plates at these locations. Would require approximately an additional 160 plates and 320 bolts/washers/nuts. If so, send to us an RFP so we can get going (see attached notes from Field Superintendent Pete Abrams). Call Pete at 321-2826 with any specific questions.

Contractor Signature: Jeremy Adam Date: 9-30-11

RESPONSE: THE CONTRACTOR SHOULD OBTAIN AND INSTALL THE PLATES AS PROPOSED EXCEPT THEY SHOULD BE 1/4" X 4" X 17" PCS

CHRIS GIANOTTI, PND ENGINEERS 9/30/11

STATE OF ALASKA 49TH Christopher Gianotti CE-7559 REGISTERED PROFESSIONAL ENGINEER

Resident Engineer Signature: _____ Date: _____

COPY: Prime Design Consultant/Project Manager | ATTACHMENTS:

1-B-15

G:/COMMON/FACILITIES/FORMS/DCVR.FORM REVISED: 9/30/2011

CE 2 of 5

123

New Item 506(14) Added Timber Connections

STATE OF ALASKA DOT&PF SOUTHEAST REGION	DESIGN CLARIFICATION VARIATION REQUEST	

PROJECT NO: 68979/BR-0003(144)		PROJECT: JNU-BASIN ROAD TRESTLE REPAIR	
PROJECT MANAGER: JOHN KAJDAN		RESIDENT ENGINEER: CHUCK CORREA	
CONTRACTOR: SILVER BOW CONSTRUCTION CO.		CHRISTOPHER GIANOTTI	
TO: JOHN KAJDAN		■ STRUCTURAL	☐ ELECTRICAL
FROM: JEREMY ADAM		☐ ARCHITECTURAL	☐ PLUMBING
DCVR #: 7	DATE REQ'D: ASAP	☐ MECHANICAL	

REQUEST:

Column to Cap Beam Plates: Sheets N6.1 to N6.6 show a bracket tying columns to cap beams. Alternate bents have brackets installed on middle and uphill end columns with none on downhill columns. Bents in between alternate bents have no brackets/plates at all tying columns to cap beams (total of 80 locations). Please advise on whether the State wants a price to install plates at these locations. Would require approximately an additional 160 plates and 320 bolts/washers/nuts. If so, send to us an RFP so we can get going (see attached notes from Field Superintendent Pete Abrams). Call Pete at 321-2826 with any specific questions.

Contractor Signature: *Jeremy Adam* Date: 9-30-11

RESPONSE: THE CONTRACTOR SHOULD OBTAIN AND INSTALL THE PLATES AS PROPOSED EXCEPT THEY SHOULD BE 1/4" X 4" X 17" PLS

CHRIS GIANOTTI, PND ENGINEERS 9/30/11

Resident Engineer Signature: _____ Date: _____

COPY: Prime Design Consultant/Project Manager	ATTACHMENTS:

G:/COMMON/FACILITIES/FORMS/DCVR FORM

REVISED: 9/30/2011

JK 2/12/15

8/83

New Item 506(14) Added Timber Connections

SILVER BOW CONSTRUCTION

DCVR #_____

DATE: 9/29/11

TIME:_____

1 **JOB NAME:** BASIN ROAD BRIDGE PROJECT

2 **JOB NUMBER:** DOT&PRF NO. 68979/BR-0003(144)

3 **WORK DESCRIPTION:** CROSS BRACING SHTS. NG.1 TO N.G.6 SHOW A BRACKET TYING COLUMN TO CAP BEAM. ALTERNATE BENTS HAVE BRACKETS INSTALLED ON MIDDLE AND UPHILL AND COLUMNS WITH NONE ON DOWN HILL COLUMNS. BENTS IN BETWEEN ALTERNATE BENTS HAVE NO BRACKETS AT ALL TYING COLUMNS TO CAP BEAMS. TOTAL OF 80 LOCATIONS.

4 **POSSIBLE SOLUTIONS:** NEED 160 PLATES 320 BOLTS

A.

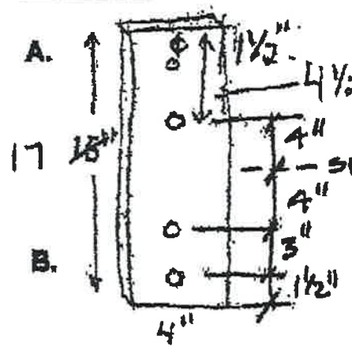

~~½"~~ GALV. PLATE ¼"

3/4" BOLTS 14" LONG

B.

C.

STATE OF ALASKA
49TH
Christopher Gianotti
CE-7559
1-8-15
REGISTERED PROFESSIONAL ENGINEER

PROJECT FOREMAN:_____

JSK 9/14/15

9/23

New Item 506(14) Added Timber Connections

SILVER BOW CONSTRUCTION **DATE:** 9/29/11

DCVR #_____ **TIME:**_____

1 **JOB NAME:** BASIN ROAD BRIDGE PROJECT

2 **JOB NUMBER:** DOT&PRF NO. 68979/BR-0003(144)

3 **WORK DESCRIPTION:** CROSS BRACING SHTS. NO.1 TO NO.6 SHOW A BRACKET TYING COLUMN TO CAP BEAM. ALTERNATE BENTS HAVE BRACKETS INSTALLED ON MIDDLE AND UPHILL AND COLUMNS WITH NONE ON DOWN HILL COLUMNS. BENTS INBETWEEN ALTERNATE BENTS HAVE NO BRACKETS AT ALL TYING COLUMNS TO CAP BEAMS. TOTAL OF 80 LOCATIONS.

4 **POSSIBLE SOLUTIONS:** NEED 160 PLATES 320 BOLTS

A.

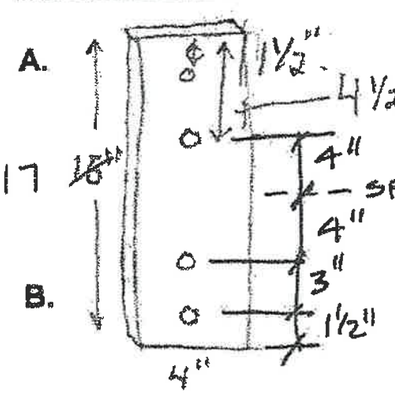

~~½~~ ¼" GALV. PLATE

B. 3/4" BOLTS 14" Long

C.

PROJECT FOREMAN:_____

PND
9360 Glacier Highway, Suite 100
Juneau, Alaska 99801
phone 907.586.2093
fax 907.586.2099

Project: 092035 Basin Road Trestle
Sheet Number: 1 of 5
Calculated by: MDS Date: 11/10/15
Checked by: _____ Date: _____

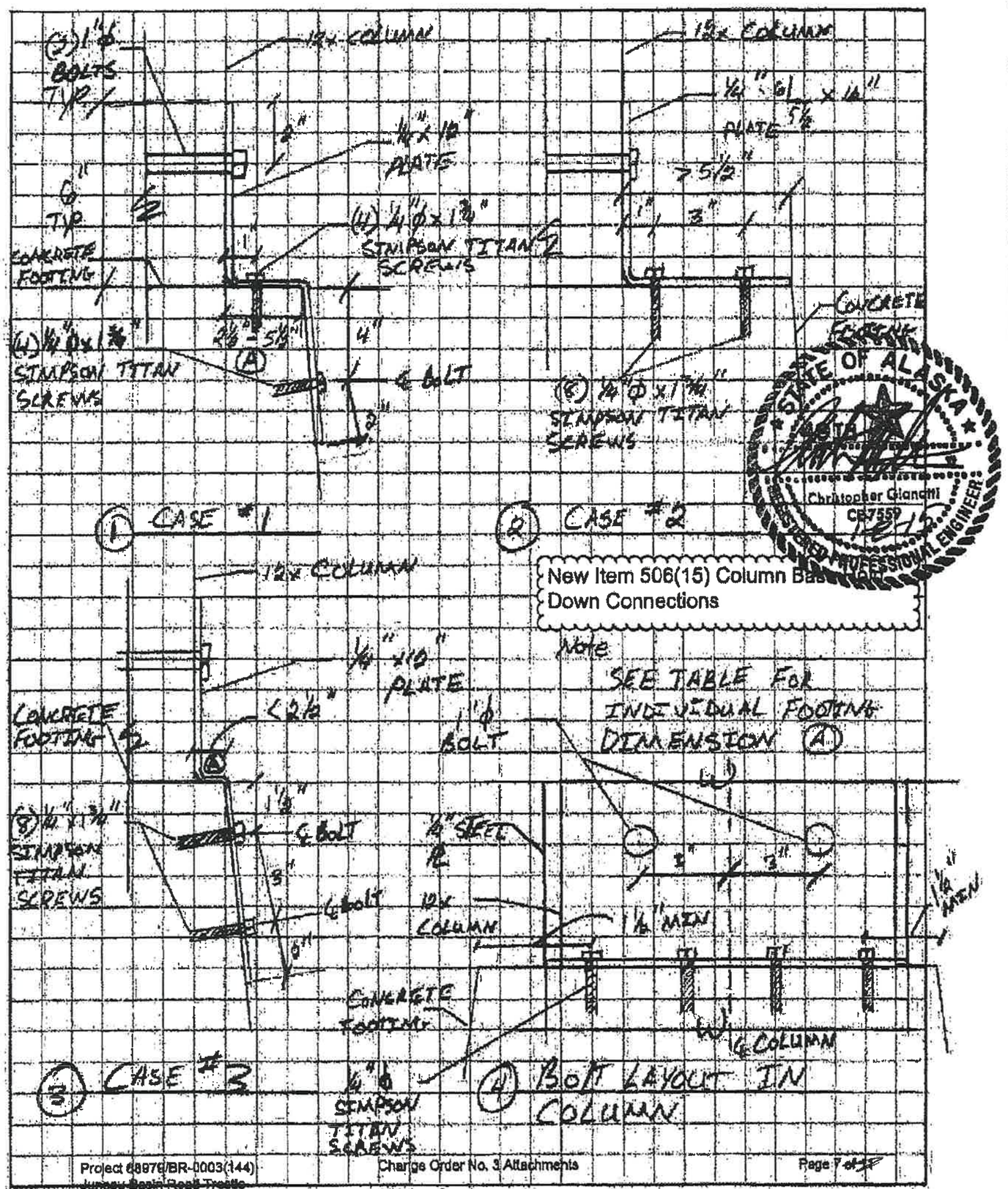

P N D
9360 Glacier Highway, Suite 100
Juneau, Alaska 99801
phone 907.586.2093
fax 907.586.2099

Project: 0920325 Basin Road Trestle
Sheet Number: 1 Of: 5
Calculated by: MDS Date: 11/10/11
Checked by: _____ Date: _____

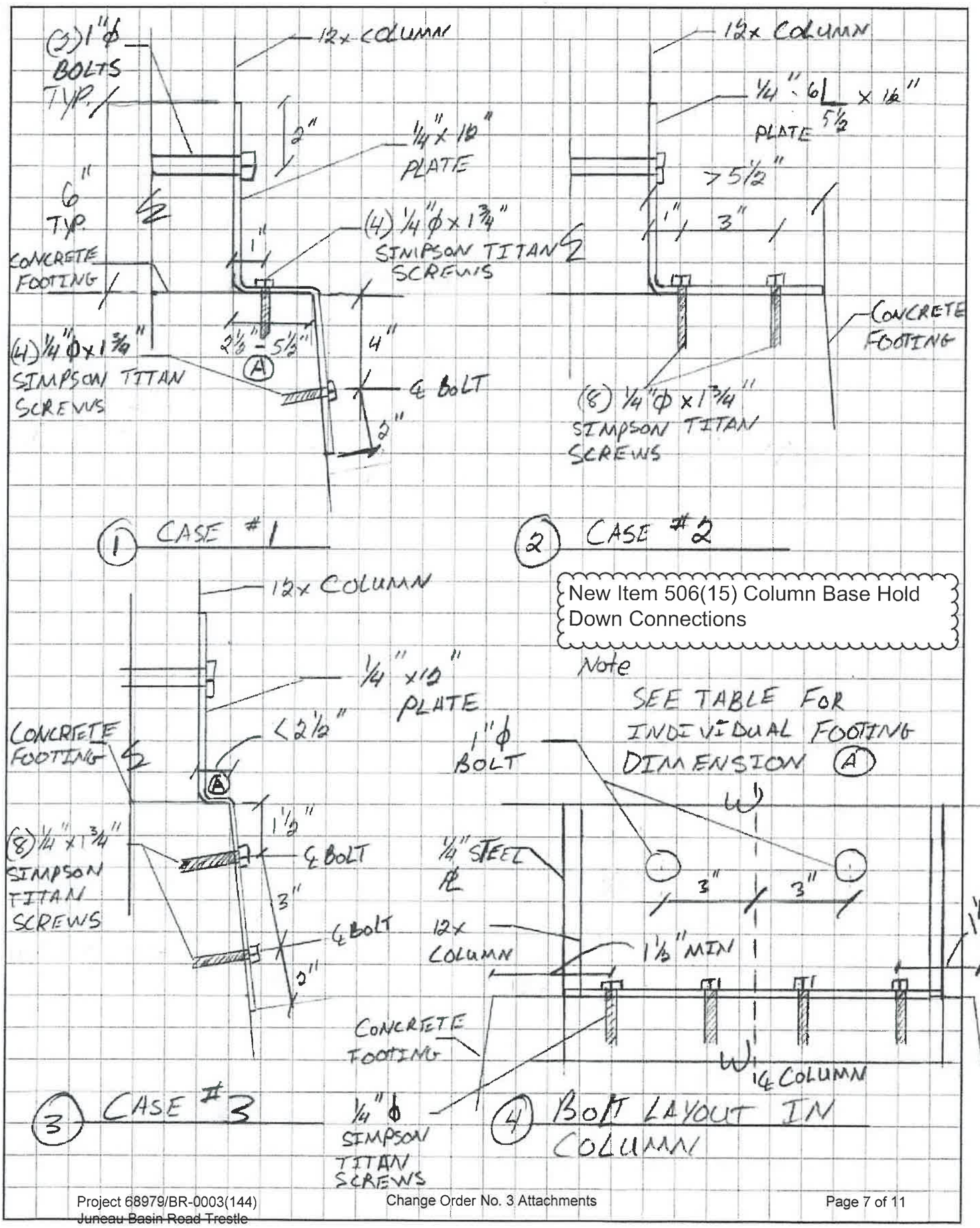

New Item 506(15) Column Base Hold Down Connections

12/83

JSK

P | N | D
9360 Glacier Highway, Suite 100
Juneau, Alaska 99801
phone 907.586.2093
fax 907.586.2099

Project: 098025 Basin Road Trestle
Sheet Number: 2 Of: 5
Calculated by: MDS Date: 11/11/11
Checked by: Date:

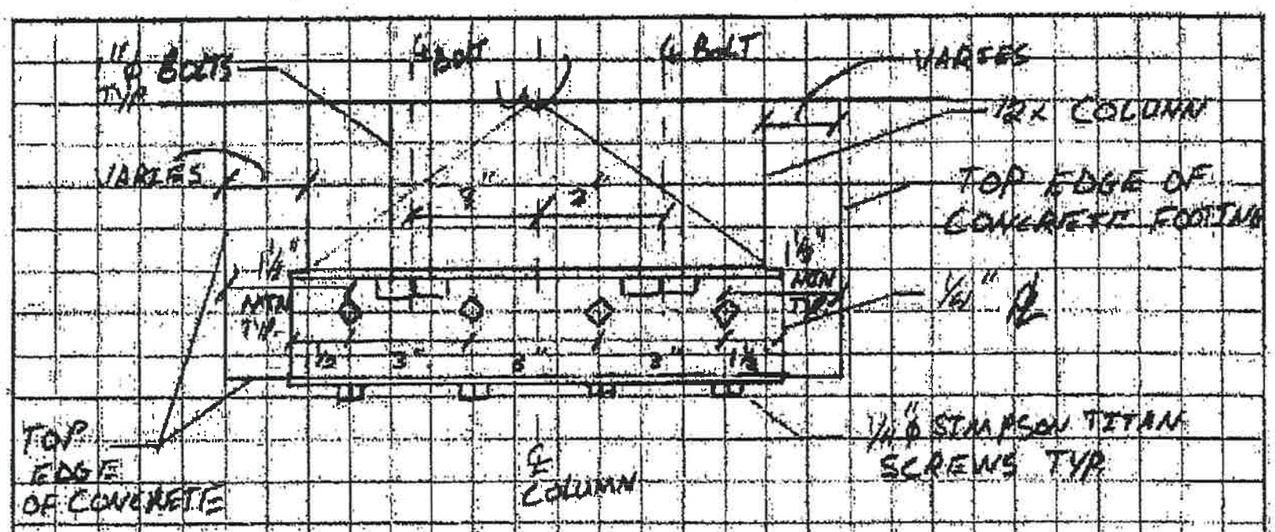

(5) CASE #1 PLAN VIEW

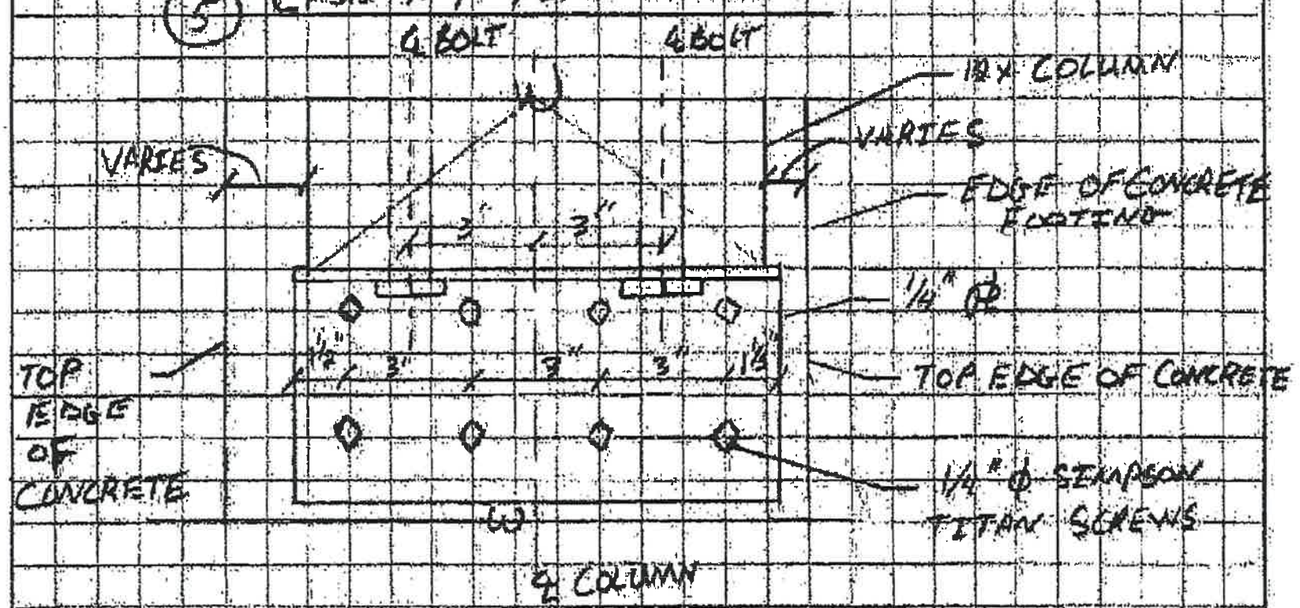

(6) CASE #2 PLAN VIEW

New Item 506(15) Column Base Hold Down Connections

STATE OF ALASKA
REGISTERED PROFESSIONAL ENGINEER

Project 68979/BR-[illegible]
Juneau Basin Road Trestle

1-2-15

18/21

JSK

13/83

P | N | D

9360 Glacier Highway, Suite 100
Juneau, Alaska 99801
phone 907.586.2093
fax 907.586.2099

Project: 090025 Basin Road Trestle
Sheet Number: 2 Of: 5
Calculated by: MDS Date: 11/11/11
Checked by: Date:

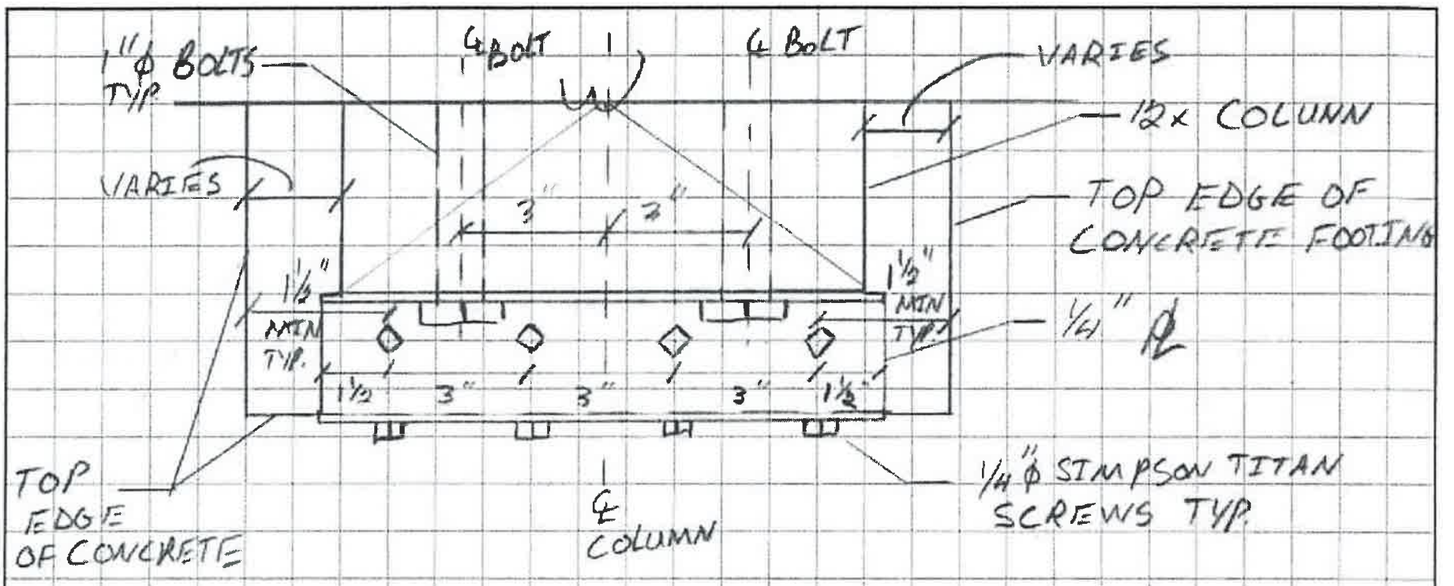

(5) CASE #1 PLAN VIEW

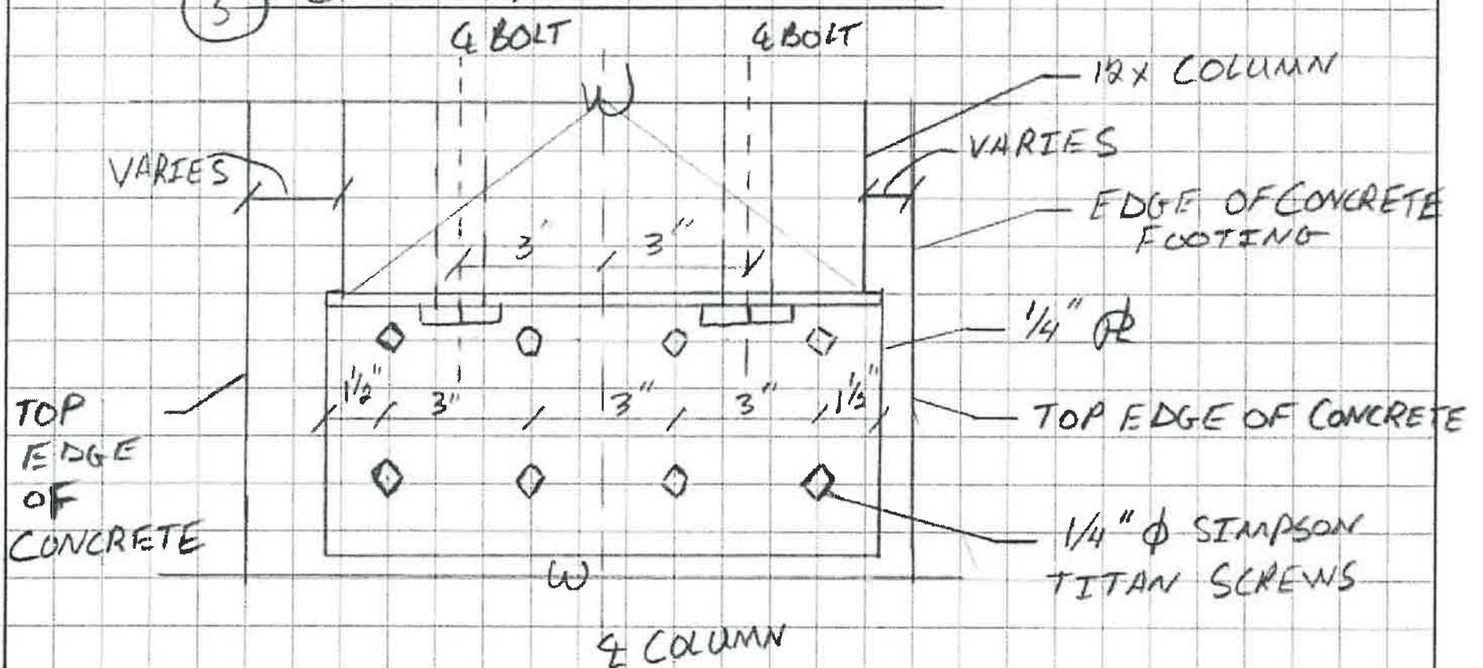

(6) CASE #2 PLAN VIEW

New Item 506(15) Column Base Hold Down Connections

JSK 11/13

P | N | D
9360 Glacier Highway, Suite 100
Juneau, Alaska 99801
phone 907.586.2093
fax 907.586.2099

Project: 080085 Basin Road Trestle
Sheet Number: 3 Of: 5
Calculated by: MDS Date: 11/14
Checked by: _____ Date: _____

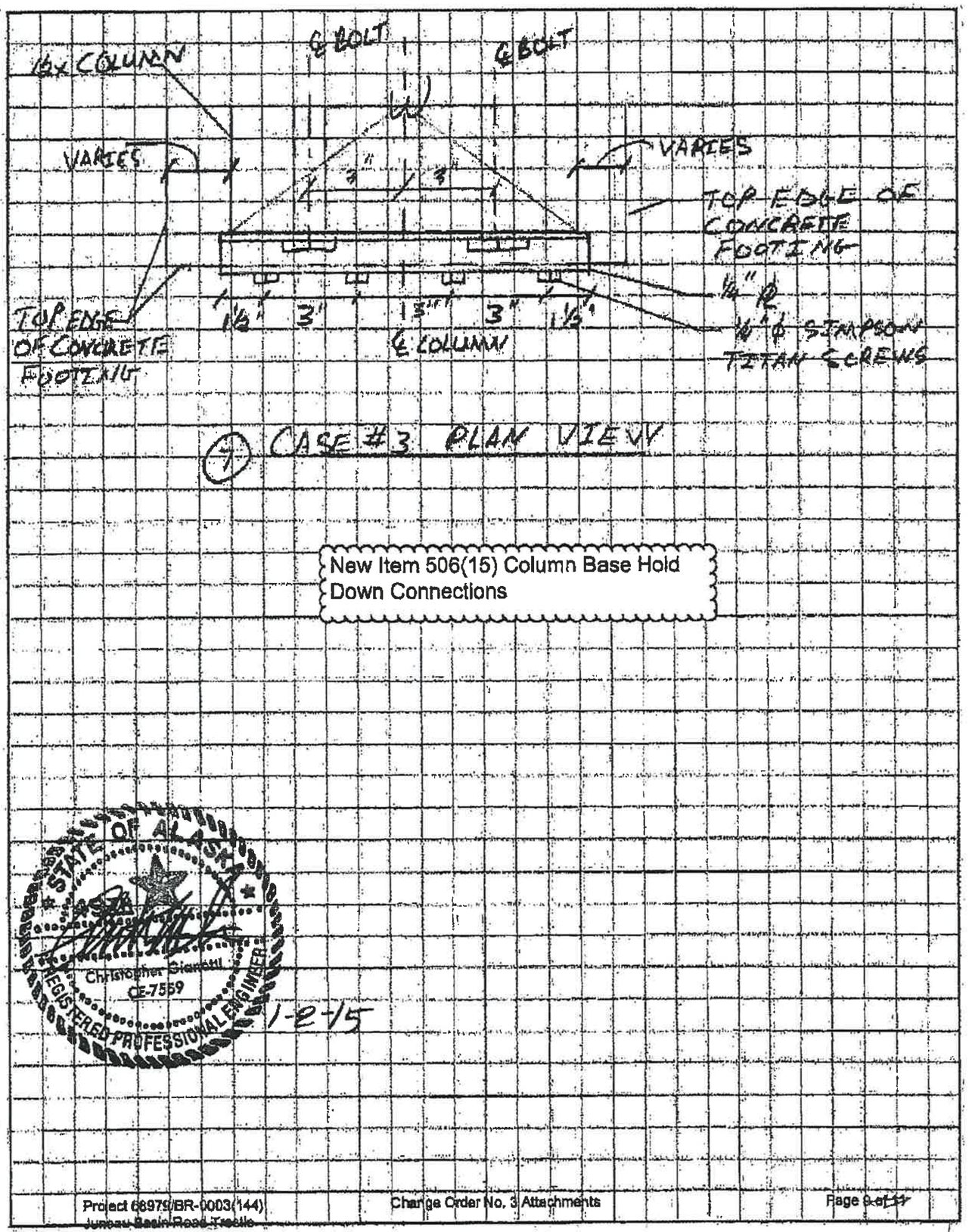

New Item 506(15) Column Base Hold Down Connections

STATE OF ALASKA
REGISTERED PROFESSIONAL ENGINEER
Christopher Gianotti
CE-7559
1-2-15

19/21

JSK 15/83

P N D
9360 Glacier Highway, Suite 100
Juneau, Alaska 99801
phone 907.586.2093
fax 907.586.2099

Project: 095025 Basin Road Trestle
Sheet Number: 3 Of: 5
Calculated by: KADS Date: 11/11/11
Checked by: _____ Date: _____

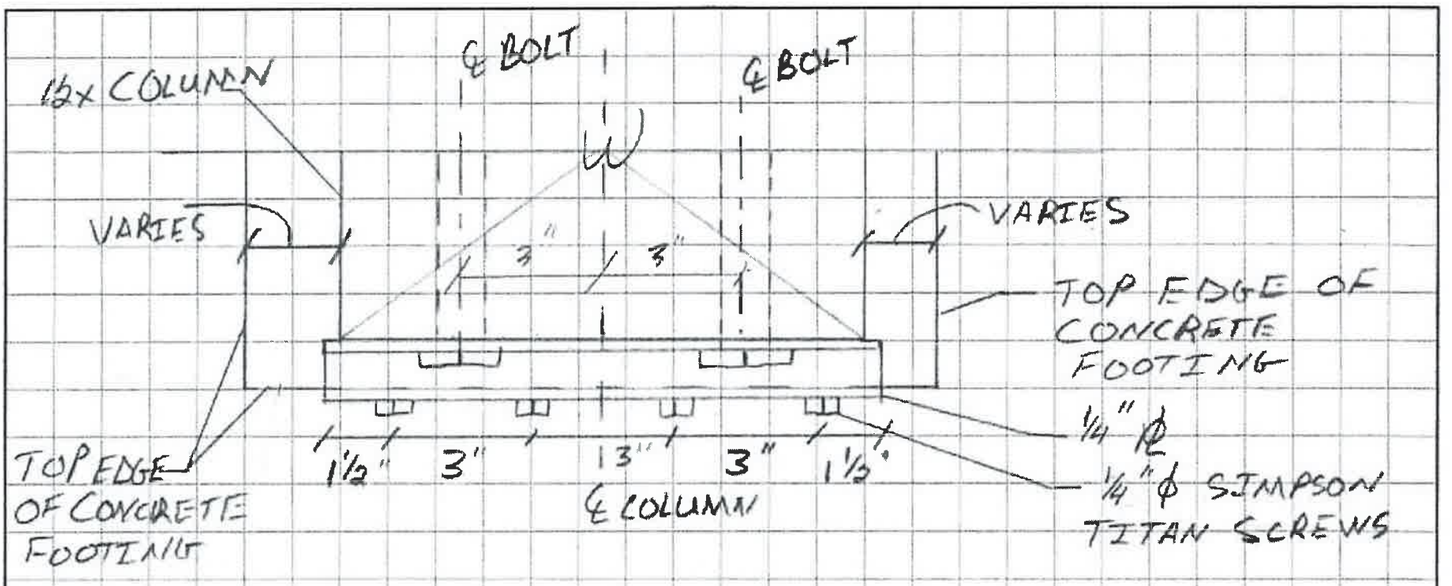

(7) CASE #3 PLAN VIEW

New Item 506(15) Column Base Hold Down Connections

J5K 16/83

092025 Basin Road Trestle

Footing Bracket Dimension Table

Bent	Column	Side	Case	A (in)	Bent	Column	Side	Case	A (in)
4	A	Uphill	*		18	A	Uphill	2	-
		Downhill	*				Downhill	3	1.5
	B	Uphill	3	2		B	Uphill	1	2.5
		Downhill	1	3			Downhill	1	3
6	A	Uphill	*			C	Uphill	*	
		Downhill	*				Downhill	*	
	B	Uphill	1	2.5	20	A	Uphill	2	-
		Downhill	2	-			Downhill	3	2
8	A	Uphill	2	-		B	Uphill	1	5
		Downhill	3	2			Downhill	1	4
	B	Uphill	3	1.5	22	A	Uphill	3	1.5
		Downhill	1	3.5			Downhill	2	-
	C	Uphill	3	2		B	Uphill	2	-
		Downhill	2	5.5			Downhill	1	3.5
	D	Uphill	1	3.5		C	Uphill	2	-
		Downhill	1	2.75			Downhill	1	3
10	A	Uphill	2	-	24	A	Uphill	1	5
		Downhill	2	-			Downhill	1	2.5
	B	Uphill	1	4		B	Uphill	2	-
		Downhill	3	2			Downhill	1	4
	C	Uphill	1	4		C	Uphill	2	-
		Downhill	3	2			Downhill	2	-
	D	Uphill	2	-	26	A	Uphill	3	1.5
		Downhill	1	3			Downhill	2	-
12	A	Uphill	*			B	Uphill	3	1
		Downhill	*				Downhill	1	4
	B	Uphill	*			C	Uphill	*	
		Downhill	*				Downhill	*	
	C	Uphill	*			D	Uphill	2	-
		Downhill	1	3			Downhill	1	5
14	A	Uphill	*		28	A	Uphill	3	1.5
		Downhill	*				Downhill	1	4
	B	Uphill	1	3		B	Uphill	1	2.5
		Downhill	1	3.25			Downhill	1	2.5
	C	Uphill	1	4.5	30	A	Uphill	1	4
		Downhill	3	1			Downhill	3	2
16	A	Uphill	3	2		B	Uphill	1	5
		Downhill	1	4			Downhill	1	3
	B	Uphill	3	1.5	32	A	Uphill	1	5
		Downhill	1	3.5			Downhill	3	0.5
	C	Uphill	*			B	Uphill	3	2
		Downhill	*				Downhill	1	3.5

Note: * indicated footings that were not accessible at the time of the survey to size. The contractor shall uncover these footings and size plates for the up hill and down hill sides of the column according to the provided sketches

STATE OF ALASKA
49TH
Christopher Gianotti
Project 68979/BR-0003(...)
Juneau Basin Road Trestle
REGISTERED PROFESSIONAL ENGINEER

1-8-15

New Item 506(15) Column Base Hold Down Connections

JSK 17/83

Footing Bracket Dimension Table

Bent	Column	Side	Case	A (in)	Bent	Column	Side	Case	A (in)
4	A	Uphill	*		18	A	Uphill	2	-
		Downhill	*				Downhill	3	1.5
	B	Uphill	3	2		B	Uphill	1	2.5
		Downhill	1	3			Downhill	1	3
6	A	Uphill	*			C	Uphill	*	
		Downhill	*				Downhill	*	
	B	Uphill	1	2.5	20	A	Uphill	2	-
		Downhill	2	-			Downhill	3	2
8	A	Uphill	2	-		B	Uphill	1	5
		Downhill	3	2			Downhill	1	4
	B	Uphill	3	1.5	22	A	Uphill	3	1.5
		Downhill	1	3.5			Downhill	2	-
	C	Uphill	3	2		B	Uphill	2	-
		Downhill	2	5.5			Downhill	1	3.5
	D	Uphill	1	3.5		C	Uphill	2	-
		Downhill	1	2.75			Downhill	1	3
10	A	Uphill	2	-	24	A	Uphill	1	5
		Downhill	2	-			Downhill	1	2.5
	B	Uphill	1	4		B	Uphill	2	-
		Downhill	3	2			Downhill	1	4
	C	Uphill	1	4		C	Uphill	2	-
		Downhill	3	2			Downhill	2	-
	D	Uphill	2	-	26	A	Uphill	3	1.5
		Downhill	1	3			Downhill	2	-
12	A	Uphill	*			B	Uphill	3	1
		Downhill	*				Downhill	1	4
	B	Uphill	*			C	Uphill	*	
		Downhill	*				Downhill	*	
	C	Uphill	*			D	Uphill	2	-
		Downhill	1	3			Downhill	1	5
14	A	Uphill	*		28	A	Uphill	3	1.5
		Downhill	*				Downhill	1	4
	B	Uphill	1	3		B	Uphill	1	2.5
		Downhill	1	3.25			Downhill	1	2.5
	C	Uphill	1	4.5	30	A	Uphill	1	4
		Downhill	3	1			Downhill	3	2
16	A	Uphill	3	2		B	Uphill	1	5
		Downhill	1	4			Downhill	1	3
	B	Uphill	3	1.5	32	A	Uphill	1	5
		Downhill	1	3.5			Downhill	3	0.5
	C	Uphill	*			B	Uphill	3	2
		Downhill	*				Downhill	1	3.5

Note: * indicated footings that were not accessible at the time of the survey to size. The contractor shall uncover these footings and size plates for the up hill and down hill sides of the column according to the provided sketches

New Item 506(15) Column Base Hold Down Connections

JSK 18/83

092025 Basin Road Trestle

Footing Bracket Dimension Table

Bent	Column	Side	Case	A (in)
34	A	Uphill	3	1.5
		Downhill	1	3.5
	B	Uphill	1	2.5
		Downhill	1	3.5
36	A	Uphill	*	
		Downhill	3	2
	B	Uphill	1	4.5
		Downhill	2	-
38	A	Uphill	3	1.5
		Downhill	1	3
	B	Uphill	2	-
		Downhill	2	-
40	A	Uphill	1	2.5
		Downhill	1	2.5
	B	Uphill	2	-
		Downhill	2	-
42	A	Uphill	3	1
		Downhill	1	4.5
	B	Uphill	1	2.5
		Downhill	1	2.5

Note: * indicated footings that were not accessible at the time of the survey to size. The contractor shall uncover these footings and size plates for the up hill and down hill sides of the column according to the provided sketches

STATE OF ALASKA
99TH
Christopher Gianotti
CE-7559
REGISTERED PROFESSIONAL ENGINEER
12-15

New Item 506(15) Column Base Hold Down Connections

JSK 19/83

Footing Bracket Dimension Table

Bent	Column	Side	Case	A (in)
34	A	Uphill	3	1.5
		Downhill	1	3.5
	B	Uphill	1	2.5
		Downhill	1	3.5
36	A	Uphill	*	
		Downhill	3	2
	B	Uphill	1	4.5
		Downhill	2	-
38	A	Uphill	3	1.5
		Downhill	1	3
	B	Uphill	2	-
		Downhill	2	-
40	A	Uphill	1	2.5
		Downhill	1	2.5
	B	Uphill	2	-
		Downhill	2	-
42	A	Uphill	3	1
		Downhill	1	4.5
	B	Uphill	1	2.5
		Downhill	1	2.5

Note: * indicated footings that were not accessible at the time of the survey to size. The contractor shall uncover these footings and size plates for the up hill and down hill sides of the column according to the provided sketches

New Item 506(15) Column Base Hold Down Connections

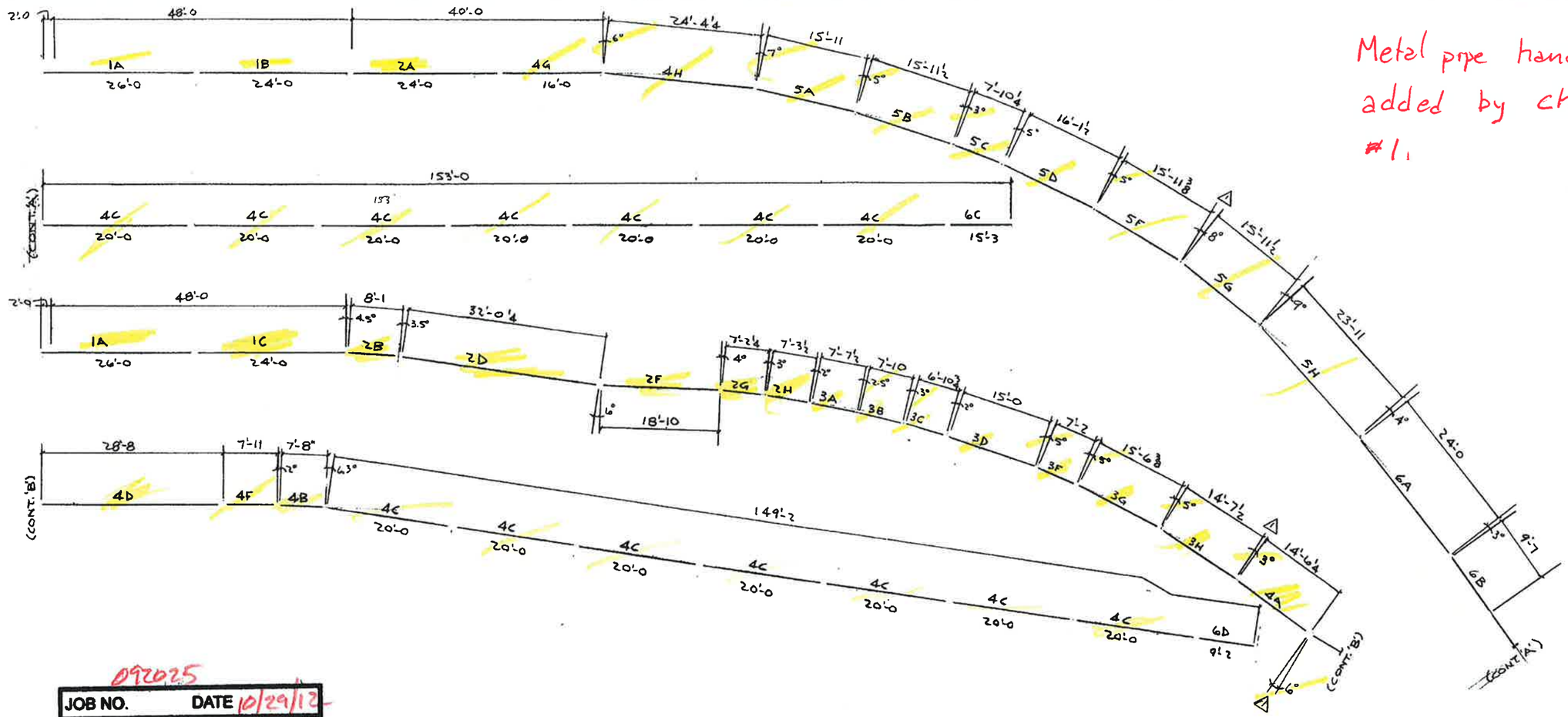

Metal pipe hand rail added by change order #1.

092025

JOB NO.	DATE 10/29/12
PND ENGINEERS, INC.	
X NO EXCEPTIONS TAKEN __ MAKE CORRECTIONS NOTED __ AMENDED AND RESUBMIT __ REJECTED - RESUBMIT	
Checking is only for general conformance with the design concept of the project and compliance with the information given in the contract documents. Contractor is responsible for dimensions and quantities to be confirmed and correlated at the job site for information that pertains solely to the fabrication processes or to the techniques of construction and for the coordination of the work of all trades.	
CHECKED BY LMG	

see stamps/comments on all shts

JSK

NOTES:

20/83

NO.	DATE	BY
1	10-25-12	

REVISIONS

*CHANGES, MKS ADDED

ALASKA METAL GOODS

SCALE:

DATE: 10-21-12

CONTRACTOR: SILVER BOW CONSTRUCTION

PROJECT: BASIN ROAD TRESTLE

HANDRAIL PLAN

DRAWING NUMBER: E-1 1

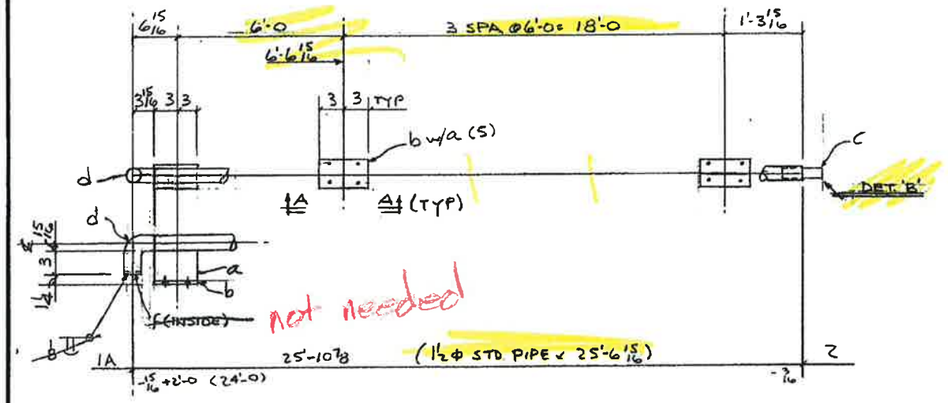

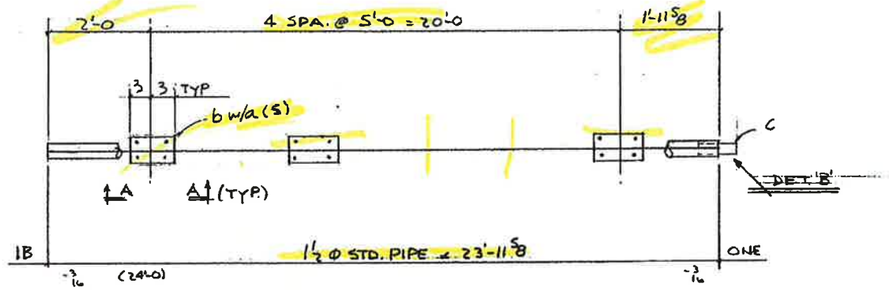

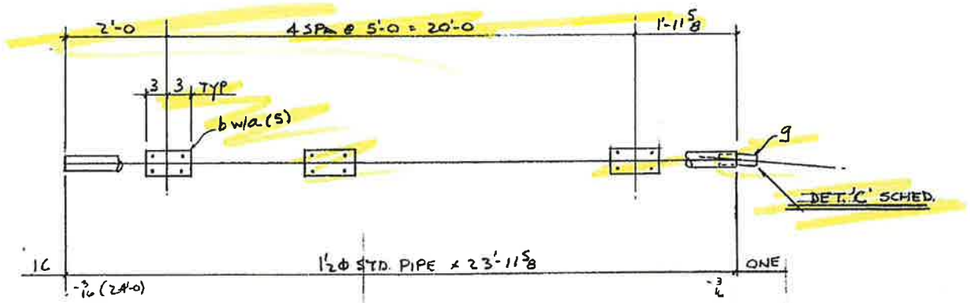

DETAIL 'C' SCHEDULE

MK	ANGLE	MITER	SLEEVE
1C	4.5°	2.25°	9

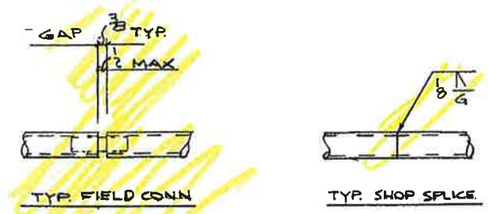

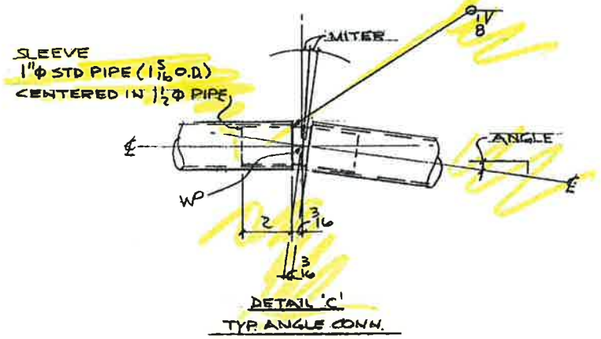

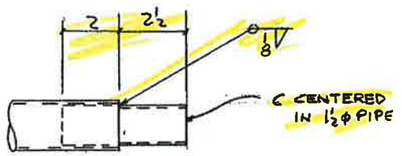

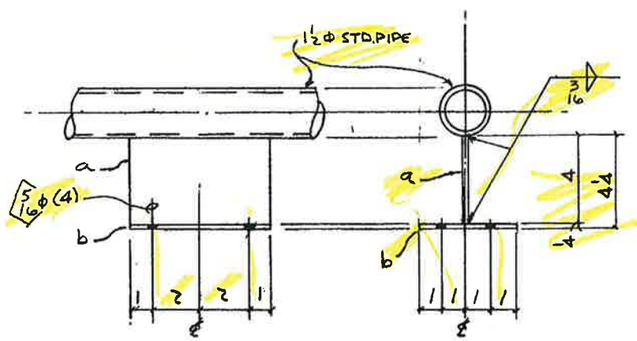

BILL OF MATERIAL

QTY	DESCRIPTION	FT	IN	MK	
2	1½Φ STD PIPE	25	6 15/16	1A	
10	PL ¼ x 4	0	6	a	
10	PL ¼ x 4	0	6	b	
2	1"Φ STD PIPE	0	4½	c	
2	1½Φ 90° ELLS w/ 2 TAN.			d	1" IR. WAG # 338-2
2	PL ¾ x 1 13/16 D/S			f	Not needed
40	½Φ x 3 LAGS				GALV.
ONE	1½Φ STD PIPE	23	11 5/8	1B	
5				a	
5				b	
ONE				c	
20	½Φ x 3 LAGS				GALV.
ONE	1½Φ STD PIPE	23	11 5/8	1C	
5				a	
5				b	
ONE	1"Φ STD PIPE	0	4½	9	MTR/SPLICE
20	½Φ x 3 LAGS				GALV.

Not needed

092025

JOB NO. DATE 10/29/12

PND ENGINEERS, INC.

- [X] NO EXCEPTIONS TAKEN
- [ ] MAKE CORRECTIONS NOTED
- [ ] AMENDED AND RESUBMIT
- [ ] REJECTED - RESUBMIT

Checking is only for general conformance with the design concept of the project and compliance with the information given in the contract documents. Contractor is responsible for dimensions and quantities to be confirmed and correlated at the job site for information that pertains solely to the fabrication processes or to the techniques of construction and for the coordination of the work of all trades.

CHECKED BY CMC

NOTES: 1. H.D. GALV. AFTER FAB.

JSK 21/83

ALASKA METAL GOODS

SCALE: | CONTRACTOR: SILVER BOW CONSTRUCTION | DRAWN BY: WDR

DATE: 10-24-12 | PROJECT: BASIN ROAD TRESTLE

NO. | DATE | BY | REVISIONS | HANDRAILS | DRAWING NUMBER: D-1

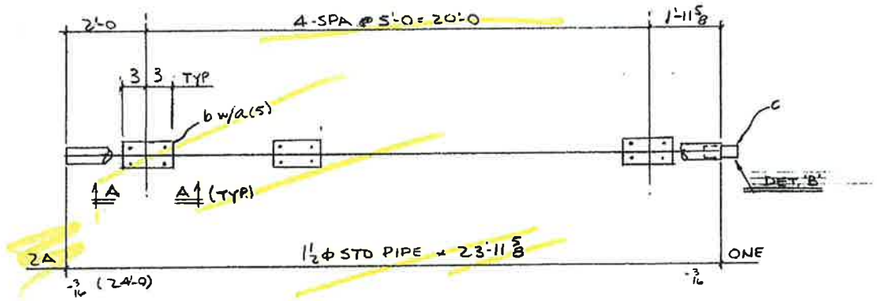

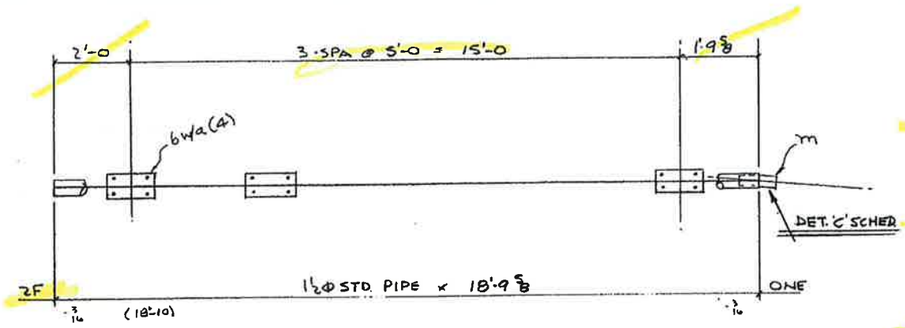

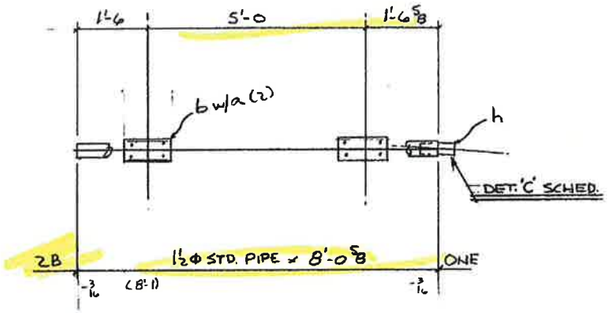

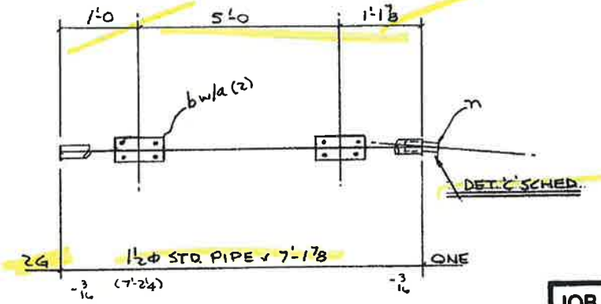

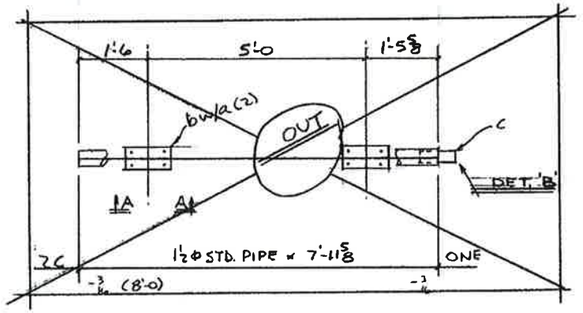

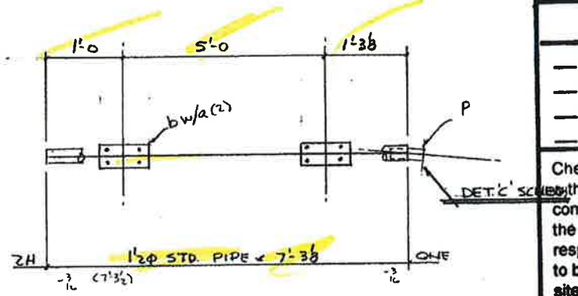

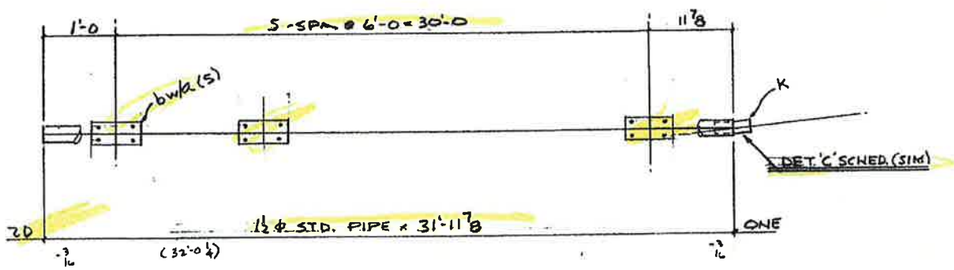

092025

JOB NO.	DATE 10/29/12
PND ENGINEERS. INC.	
__ NO EXCEPTIONS TAKEN __ MAKE CORRECTIONS NOTED __ AMENDED AND RESUBMIT __ REJECTED - RESUBMIT	
Checking is only for general conformance with the design concept of the project and compliance with the information given in the contract documents. Contractor is responsible for dimensions and quantities to be confirmed and correlated at the job site for information that pertains solely to the fabrication processes or to the techniques of construction and for the coordination of the work of all trades.	
CHECKED BY CMG	

DETAIL 'C' SCHEDULE

MK	ANGLE	MITER	SLEEVE
2B	3.5°	1.75°	h
2D	6°	3°	K
2F	4°	2°	m
2G	3°	1.5°	n
2H	2°	1°	P

BILL OF MATERIAL

QTY	DESCRIPTION	FT	IN	MK	
ONE	1½Φ STD. PIPE	23	11 5/8	2A	
5	PL ¼ x 4	0	6	a	
5	PL ¼ x 4	0	6	b	
ONE	1"Φ STD. PIPE	0	4½	c	
20	½Φ x 3 LAGS				GALV.
ONE	1½Φ STD. PIPE	8	0 5/8	2B	
2				a	
2				b	
ONE	1"Φ STD. PIPE	0	4½	h	MTR/SPLICE
8	½Φ x 3 LAGS				GALV.
ONE	1½Φ STD. PIPE	7	11 5/8	2C	
2				a	
2				b	
ONE				c	
8	½Φ x 3 LAGS				GALV.
ONE	1½Φ STD. PIPE	31	11 7/8	2D	
6				a	
6				b	
ONE	1"Φ STD. PIPE	0	4½	K	MTR/SPLICE
24	½Φ x 3 LAGS				GALV.
ONE	1½Φ STD. PIPE	18	9 5/8	2F	
4				a	
4				b	
ONE	1"Φ STD. PIPE	0	4½	m	MTR/SPLICE
16	½Φ x 3 LAGS				GALV.
ONE	1½Φ STD. PIPE	7	1 7/8	2G	
2				a	
2				b	
ONE	1"Φ STD. PIPE	0	4½	n	MTR/SPLICE
8	½Φ x 3 LAGS				GALV.
ONE	1½Φ STD. PIPE	7	3 5/8	2H	
2				a	
2				b	
ONE	1"Φ STD. PIPE	0	4½	P	MTR/SPLICE
8	½Φ x 3 LAGS				GALV.

NOTES: 1. H.D. GALV. AFTER FAB

JSK 22/83

NO	DATE	BY	REVISIONS

ALASKA METAL GOODS

SCALE:

DATE 10-25-12

CONTRACTOR: SILVER BOW CONSTRUCTION

DRAWN BY WWR

PROJECT: BASIN ROAD TRESTLE

HANDRAILS

DRAWING NUMBER D-2

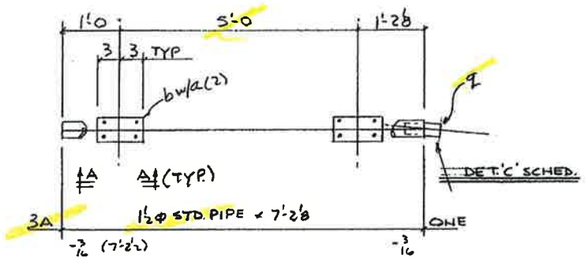

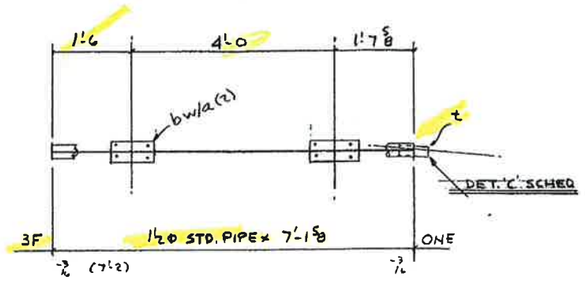

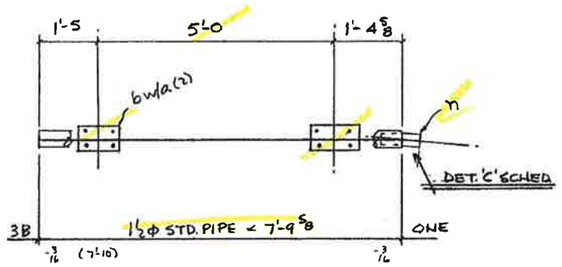

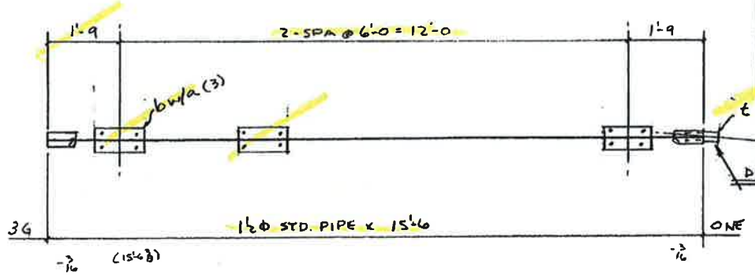

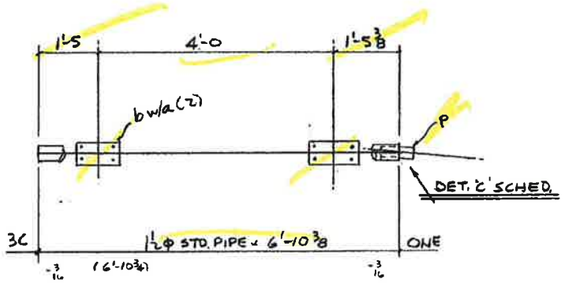

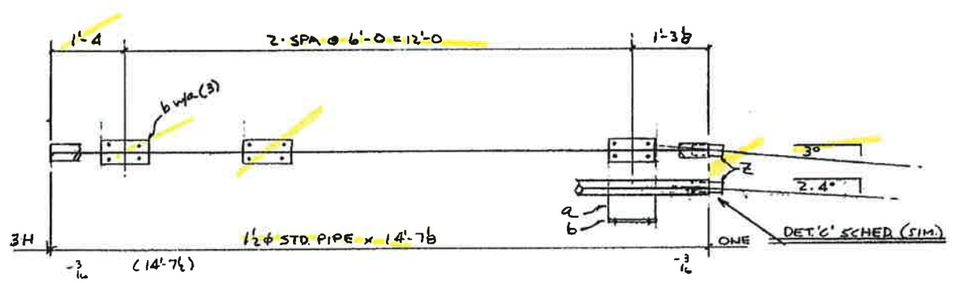

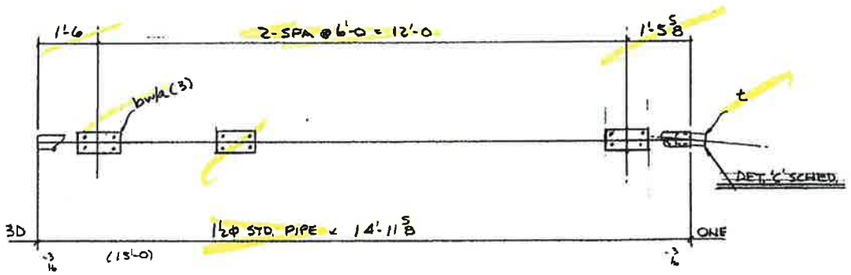

DETAIL 'C' SCHEDULE			
MK.	ANGLE	MITER	SLEEVE
3A	2.5°	1¼°	q
3B	3°	1½°	n
3C	2°	1°	p
3D	5°	2½°	t
3F	5°	2½°	t
3G	5°	2½°	t
3H	3.25°	1½°+	z

092025

JOB NO. DATE 10-29-12

PND ENGINEERS, INC.

X NO EXCEPTIONS TAKEN
__ MAKE CORRECTIONS NOTED
__ AMENDED AND RESUBMIT
__ REJECTED - RESUBMIT

Checking is only for general conformance with the design concept of the project and compliance with the information given in the contract documents. Contractor is responsible for dimensions and quantities to be confirmed and correlated at the job site for information that pertains solely to the fabrication processes or to the techniques of construction and for the coordination of the work of all trades.

CHECKED BY MG

BILL OF MATERIAL

QTY	DESCRIPTION	FT	IN	MK	
ONE	1½Φ STD PIPE	7	2⅛	3A	
2	R 4x4	0	6	q	
2	R 4x4	0	6	b	
ONE	1"Φ STD PIPE	0	4½	q	MTR/SPLICE
8	4Φx3 LAGS				GALV
ONE	1½Φ STD PIPE	7	9⅝	3B	
2				q	
2				b	
ONE	1"Φ STD PIPE	0	4½	n	MTR/SPLICE
8	4Φx3 LAGS				
ONE	1½Φ STD PIPE	6	10⅜	3C	
2				q	
2				b	
ONE	1"Φ STD PIPE	0	4½	p	MTR/SPLICE
8	4Φx3 LAGS				GALV
ONE	1½Φ STD PIPE	14	11⅝	3D	
3				q	
3				b	
ONE	1"Φ STD PIPE	0	4½	t	MTR/SPLICE
12	4Φx3 LAGS				GALV
ONE	1½Φ STD PIPE	7	1⅝	3F	
2				q	
2				b	
ONE				t	
8	4Φx3 LAGS				GALV
ONE	1½Φ STD PIPE	15	6	3G	
3				q	
3				b	
ONE				t	
12	4Φx3 LAGS				GALV
ONE	1½Φ STD PIPE	14	7⅛	3H	
3				q	
3				b	
ONE	1"Φ STD PIPE	0	4½	z	MTR/SPLICE
12	4Φx3 LAGS				GALV

NOTES: H.D. GALV. AFTER FAB.

JSK 23/83

ALASKA METAL GOODS

SCALE: | CONTRACTOR: SILVER BOW CONSTRUCTION | DRAWN BY: CHG

DATE: 10-26-12

PROJECT: BASIN ROAD TRESTLE

HANDRAILS

D-3

NO.	DATE	BY
REVISIONS		

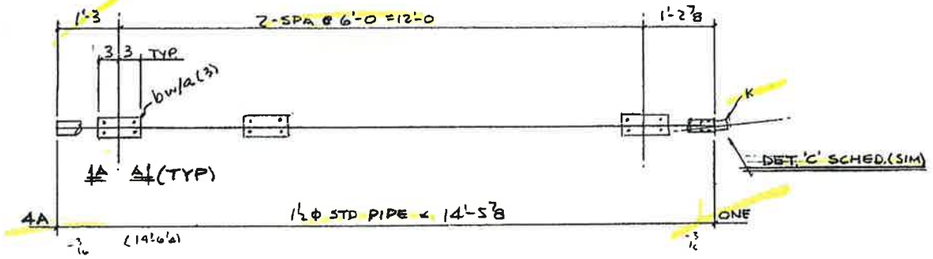

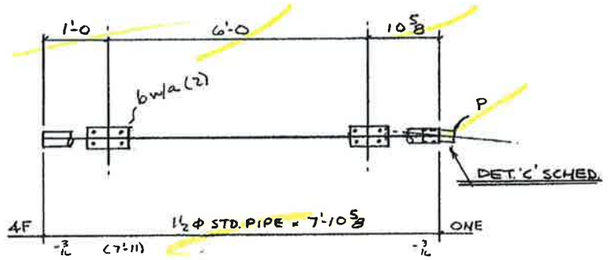

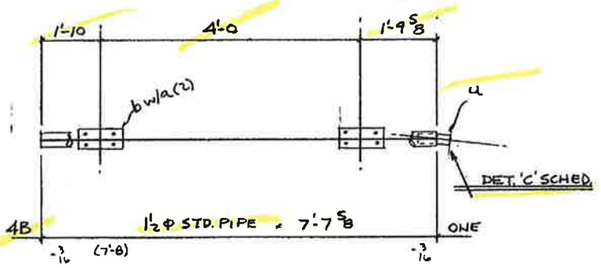

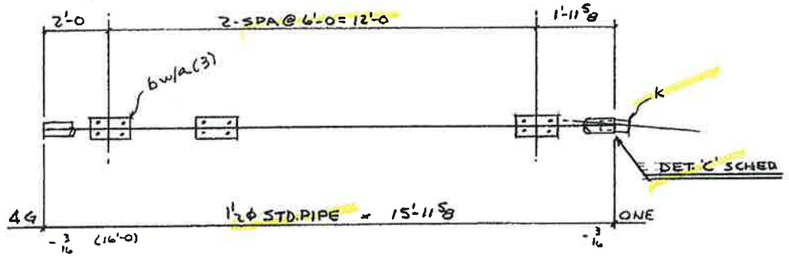

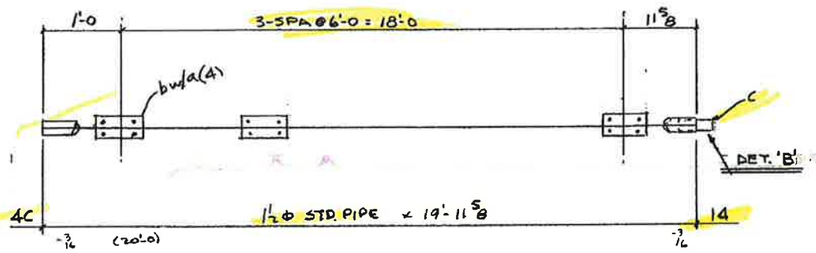

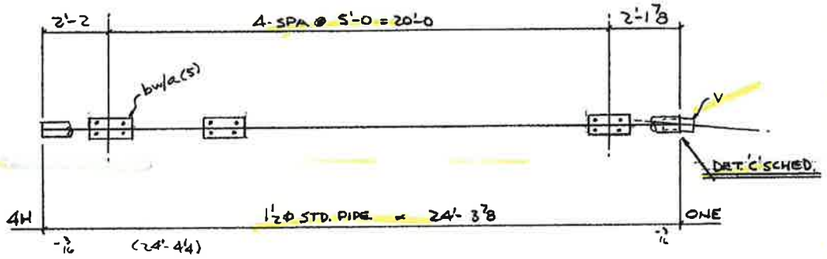

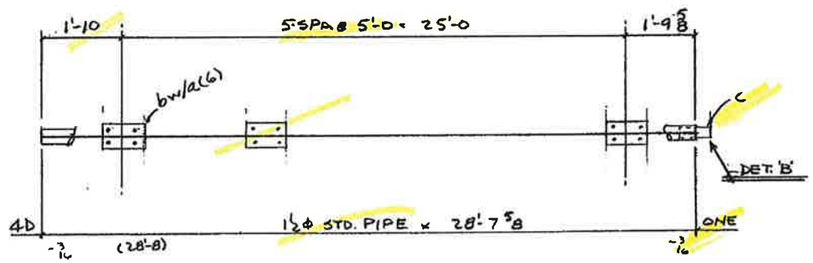

09 2025

JOB NO.	DATE 10/29/12
PND ENGINEERS, INC.	
X NO EXCEPTIONS TAKEN __ MAKE CORRECTIONS NOTED __ AMENDED AND RESUBMIT __ REJECTED - RESUBMIT	
Checking is only for general conformance with the design concept of the project and compliance with the information given in the contract documents. Contractor is responsible for dimensions and quantities to be confirmed and correlated at the job site for information that pertains solely to the fabrication processes or to the techniques of construction and for the coordination of the work of all trades.	
CHECKED BY CMG	

DETAIL 'C' SCHEDULE

MK	ANGLE	MITER	SLEEVE
4A	6°	3°	K
4B	6.3°	3.15°	U
4F	2°	1°	P
4G	6°	3°	K
4H	7°	3.5°	V

BILL OF MATERIAL

QTY	DESCRIPTION	FT	IN	MK	
ONE	1 1/2ϕ STD. PIPE	14	5 3/8	4A	
3	R 1/4 x 4	0	6	a	
3	R 1/4 x 4	0	6	b	
ONE	1"ϕ STD. PIPE	0	4 1/2	K	MTR/SPLICE
12	1/4ϕ x 3 LAGS				GALV.
ONE	1 1/2ϕ STD. PIPE	7	7 5/8	4B	
2				a	
2				b	
ONE	1"ϕ STD PIPE	0	4 1/2	U	MTR/SPLICE
8	1/4ϕ x 3 LAGS				GALV.
14	1 1/2ϕ STD PIPE	19	11 5/8	4C	
56				a	
56				b	
14	1"ϕ STD. PIPE	0	4 1/2	c	
224	1/4ϕ x 3 LAGS				GALV.
ONE	1 1/2ϕ STD. PIPE	28	7 5/8	4D	
6				a	
6				b	
ONE				c	
24	1/4ϕ x 3 LAGS				GALV.
ONE	1 1/2ϕ STD PIPE	7	10 5/8	4F	
2				a	
2				b	
ONE	1"ϕ STD. PIPE	0	4 1/2	P	MTR/SPLICE
8	1/4ϕ x 3 LAGS				GALV.
ONE	1 1/2ϕ STD PIPE	15	11 5/8	4G	
3				a	
3				b	
ONE	1 1/2ϕ STD PIPE			k	
12	1/4ϕ x 3 LAGS				GALV.
ONE	1 1/2ϕ STD PIPE	24	3 3/8	4H	
5				a	
5				b	
ONE	1"ϕ STD. PIPE	0	4 1/2	V	MTR/SPLICE
20	1/4ϕ x 3 LAGS				GALV.

NOTES: 1. H.D. GALV. AFTER FAB.

USK 24/83

NO.	DATE	BY	REVISIONS

ALASKA METAL GOODS

SCALE: | CONTRACTOR: SILVER BOW CONSTRUCTION | DRAWN BY: WDMB

DATE: 10-25-12 | CHK'D:

PROJECT: BASIN ROAD TRESTLE

HANDRAILS

DRAWING NUMBER: D-4

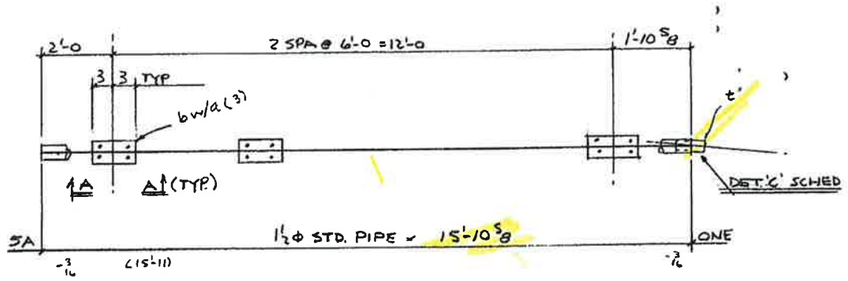

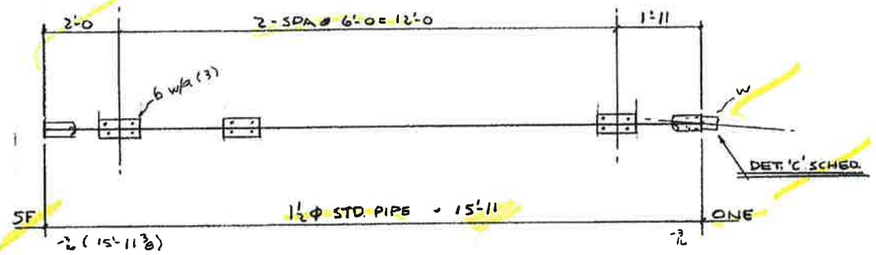

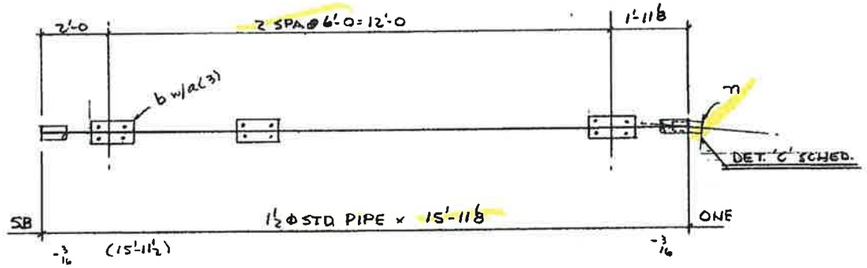

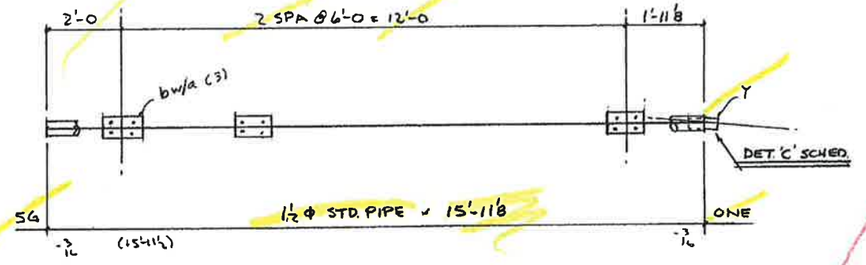

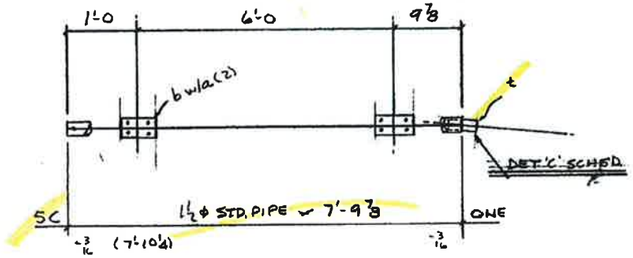

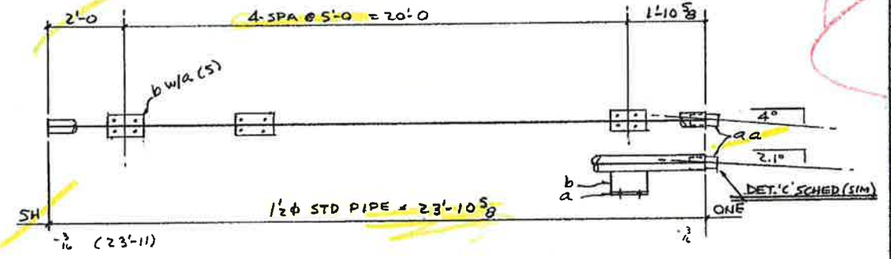

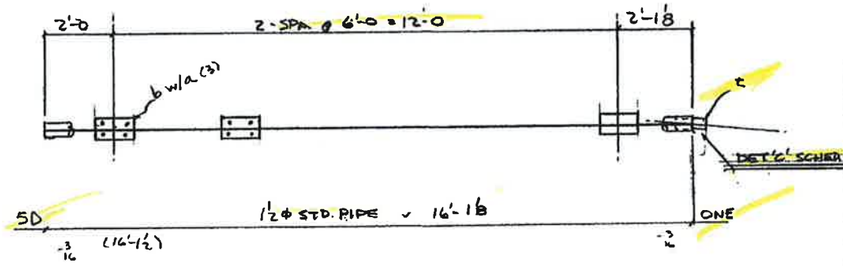

092025

JOB NO.	DATE 10/29/12
PND ENGINEERS, INC.	
X NO EXCEPTIONS TAKEN __ MAKE CORRECTIONS NOTED __ AMENDED AND RESUBMIT __ REJECTED - RESUBMIT	
Checking is only for general conformance with the design concept of the project and compliance with the information given in the contract documents. Contractor is responsible for dimensions and quantities to be confirmed and correlated at the job site for information that pertains solely to the fabrication processes or to the techniques of construction and for the coordination of the work of all trades.	
CHECKED BY MC	

DETAIL 'C' SCHEDULE

MK	ANGLE	MITER	SLEEVE
5A	5°	2.5°	t
5B	3°	1.5°	m
5C	5°	2.5°	t
5D	5°	2.5°	t
5F	8°	4°	w
5G	9°	4.5°	Y
5H	4.13°	2°+	aa

BILL OF MATERIAL

QTY	DESCRIPTION	FT	IN	MK	
ONE	1½ø STD. PIPE	15	10 3/8	5A	
3	PL ¼ x 4	0	6	a	
3	PL ¼ x 4	0	6	b	
ONE	1"ø STD. PIPE	0	4½	t	MTR/SPLICE
12	¼ø x 3 LAGS				GALV
ONE	1½ø STD PIPE	15	11⅝	5B	
3				a	
3				b	
ONE	1"ø STD. PIPE	0	4½	m	MTR/SPLICE
12	¼ø x 3 LAGS				GALV.
ONE	1½ø STD. PIPE	7	9⅞	5C	
2				a	
2				b	
ONE				t	
8	¼ø x 3 LAGS				GALV.
ONE	1½ø STD. PIPE	16	1⅛	5D	
3				a	
3				b	
ONE				t	
12	¼ø x 3 LAGS				GALV.
ONE	1½ø STD PIPE	15	11	5F	
3				a	
3				b	
ONE	1"ø STD PIPE	0	4½	w	MTR/SPLICE
12	¼ø x 3 LAGS				GALV
ONE	1½ø STD PIPE	15	11⅝	5G	
3				a	
3				b	
ONE	1"ø STD. PIPE	0	4½	Y	MTR/SPLICE
12	¼ø x 3 LAGS				GALV
ONE	1½ø STD PIPE	23	10 3/8	5H	
5				a	
5				b	
ONE	1"ø STD PIPE	0	4½	aa	MTR/SPLICE
20	¼ø x 3 LAGS				GALV

NOTES: 1. H.D GALV AFTER FAB.

JSK 25/83

NO	DATE	BY	REVISIONS

ALASKA METAL GOODS

SCALE:
DATE: 10-25-12
CONSTRUCTION: SILVER BOW CONSTRUCTION
DRAWN BY: WMR
CHK'D:
PROJECT: BASIN ROAD TRESTLE
HANDRAILS
DRAWING NUMBER: D-5

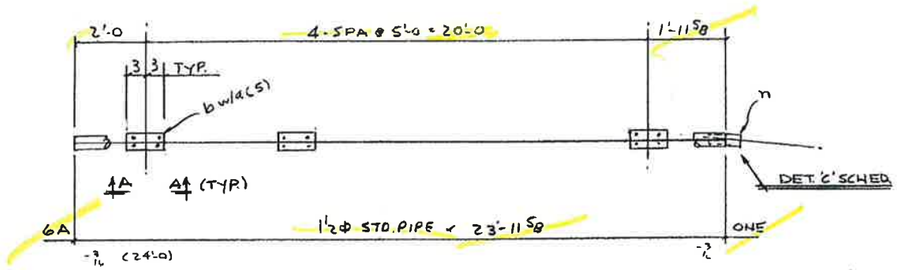

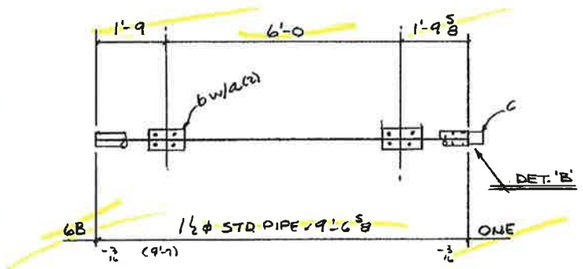

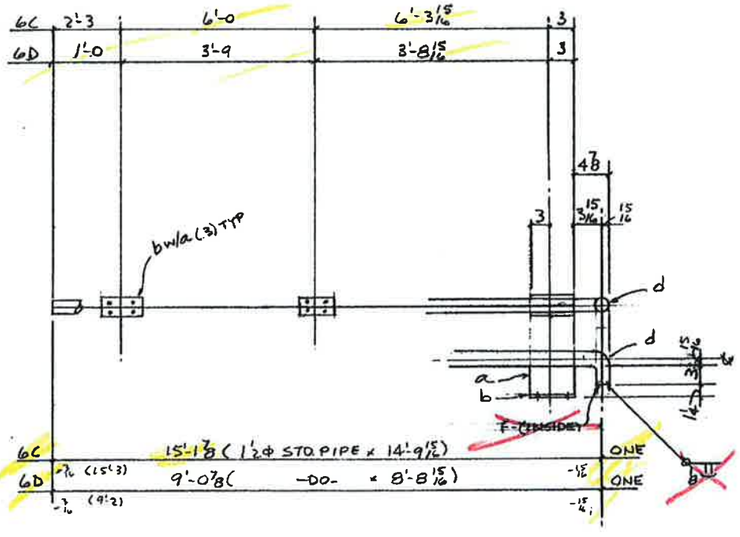

Not needed

092025

JOB NO. DATE 10-29-12

PND ENGINEERS, INC.

- X NO EXCEPTIONS TAKEN
- __ MAKE CORRECTIONS NOTED
- __ AMENDED AND RESUBMIT
- __ REJECTED - RESUBMIT

Checking is only for general conformance with the design concept of the project and compliance with the information given in the contract documents. Contractor is responsible for dimensions and quantities to be confirmed and correlated at the job site for information that pertains solely to the fabrication processes or to the techniques of construction and for the coordination of the work of all trades.

CHECKED BY CMG

BILL OF MATERIAL

QTY	DESCRIPTION	FT	IN	MK	
ONE	1 1/2 ϕ STD. PIPE	23	11 7/8	6A	
5	PL 1/4 x 4	0	6	a	
5	PL 1/4 x 4	0	6	b	
ONE	1" ϕ STD PIPE	0	4 1/2	n	MTR/SPLICE
20	4 ϕ x 3 LAGS				GALV.
ONE	1 1/2 ϕ STD. PIPE	9	6 5/8	6B	
2				a	
2				b	
ONE	1" ϕ STD. PIPE	0	4 1/2	c	
8	4 ϕ x 3 LAGS				GALV.
ONE	1 1/2 ϕ STD. PIPE	14	9 15/16	6C	
3				a	
3				b	
ONE	1 1/2 ϕ 90° EL. W/2 TAN			d	1" I.R. WAG 33B-3
~~ONE~~	~~PL 3/16 x 1 9/16 ϕ~~			F	
12	4 ϕ x 3 LAGS				GALV.
ONE	1 1/2 ϕ STD PIPE	8	8 15/16	6D	
3				a	
3				b	
ONE				d	
ONE				F	
12	4 ϕ x 3 LAGS				GALV.

DETAIL 'C' SCHEDULE

MK	ANGLE	MITER	SLEEVE
6A	3°	1.5°	n

NOTE: 1. H.D. GALV AFTER FAB.

JSK 26/83

ALASKA METAL GOODS

SCALE:	SUBMITTED TO: SILVER BOW CONSTRUCTION	DRAWN BY: WWR
DATE: 10-25-12		CK'D:
PROJECT: BASIN ROAD TRESTLE		
NO. DATE BY REVISIONS	HANDRAILS	DRAWING NUMBER: D-6

Addendum No. 3
Attachment No. 1

WORK SUMMARY

BENT No.	STRINGER REPLACEMENT			COLUMN REPLACEMENT (APPROX)					CAP BEAM (LF) APPROX	* TRANSVERSE CROSS-BRACING		FOOTINGS (CY)					SOLID BLOCKING
	FROM	TO	BF	A	B	C	D	COLUMN (LF PER BENT)		BRACE LENGTH (LF)	MBM	A	B	C	D	Total	LF PER CAP BEAM
1				2				2	20								
2	1	2	1616	8	5			13	20	19	0.0570						
3	2	4	707	11	7			18		23	0.0690						14
4					7	2		9	20	29	0.0870						
5	4	6	303		9	2		11		29	0.0870						14
6				5		5		10	20	33	0.0990						
7				5		5		10	20	37	0.1110						14
8							6	6	20	58	0.1740						
9	8	10	303			6		6		39	0.1170	2	2			4	17
10				5				5	24	47	0.1410	2		2		4	
11	10	12	303		8	2		10	24	36	0.1080						17
12				5	5			10		32	0.0960						
13	12	14	303		7			7		31	0.0930						17
14				14	6	1		21	24	24	0.0720						
15	14	16	404		2			2		26	0.0780						17
16				10	4			14	24	20	0.0600						
17	16	18	505		7			7		31	0.0930						17
18								0	24	29	0.0870						
19	18	20	707		2			2		29	0.0870						17
20				11	4			15	24	20	0.0600						
21					5			5		27	0.0810						17
22								0		49	0.1470						
23					10			10		41	0.1230						17
24	24	26	101	24				24	24	34	0.1020						
25								0		40	0.1200						17
26	26	28	202	5	12		2	19	24	53	0.1590						
27				5				5		30	0.0900	2				2	17
28				5				5	20	25	0.0750						
29	28	30	101	5	9			14		32	0.0960						14
30				5	5			10	20	25	0.0750						
31	30	32	303		4			4		29	0.0870						14
32				5				5		20	0.0600	2				2	
33	30	34	303		6			6	20	27	0.0810						14
34					6	1		7	20	27	0.0810						
35	34	36	101		7	2		9	20	32	0.0960						14
36				5		3		8	20	33	0.0990		2			2	
37	36	38	101					0		38	0.1140						14
38				5				5	20	35	0.1050		2			2	
39	38	40	202					0		31	0.0930						14
40				5		2		7		28	0.0840	2	2			4	
41	40	42	202	5	2			7		19	0.0570						14
42				6	2			8		19	0.0570						
43	42	43	1212					0	20								
TOTAL			7272					336	472		3.858					20	302

⚠2

* ADDITIONAL LONGITUDINAL CROSS BRACING SEE SHEET N6.6 TOTAL OF 356 LF (1.068 MBF)

ESTIMATE OF QUANTITIES

ITEM NO.	ITEM DESCRIPTION	UNIT	QUANTITY
202 (13)	RAILING REMOVAL (APPROXIMATELY 850 LF)	LUMP SUM	ALL REQ'D.
202 (14)	RUNNING DECK AND NAIL LAMINATED DECK REMOVAL (APPROXIMATELY 800 SQUARE YARDS)	LUMP SUM	ALL REQ'D.
202 (15)	REMOVAL OF DESIGNATED STRINGERS, CAP BEAMS, COLUMNS, AND BRACES (APPROXIMATELY 1270 LF)	LUMP SUM	ALL REQ'D.
203 (19)	UNCLASSIFIED EXCAVATION (APPROXIMATELY 225 CUBIC YARDS)	LUMP SUM	ALL REQ'D.
501 (9)	REPAIR CONCRETE FOOTINGS	CUBIC YARD	~~20~~ 9.2
506 (5)	TIMBER COLUMNS, SUPPLY TREATED 12X12	MBM	~~8.0~~ 7.599
506 (6)	REPAIR OR REPLACE TIMBER COLUMNS	MBM	8.0 7.9400
506 (7)	CAP BEAMS, SUPPLY TREATED 12X12	MBM	11.5 11.500
506 (8)	REPAIR OR REPLACE TIMBER CAP BEAMS	MBM	11.5 6.446
506 (9)	REPAIR TIMBER BRACING (APPROXIMATELY 1200 LF OF 3X12 TIMBERS) 1970	LUMP SUM	ALL REQ'D.
506 (10)	SUPPLY TREATED 4X16's (BLOCKING & STRINGERS)	MBM	~~21.3~~ 21.3135
506 (11)	TIMBER STRINGERS INSTALLED	MBM	~~21.3~~ 21.3135
506 (12)	GLUED LAMINATED TIMBER DECK (APPROXIMATELY 38 MBM)	LUMP SUM	ALL REQ'D.
506 (13)	RUNNING DECK (APPROXIMATELY 11 MBM)	LUMP SUM	ALL REQ'D.
507 (6)	BRIDGE RAILINGS (APPROXIMATELY 850 LF TIMBER RAIL)	LUMP SUM	ALL REQ'D.
606 (1)	W-BEAM GUARDRAIL	LINEAR FOOT	~~80~~ 94
615 (7)	STANDARD SIGNS	LUMP SUM	ALL REQ'D.
633 (2)	SILT BARRIER	LINEAR FOOT	~~450~~ 600
640 (1)	MOBILIZATION AND DEMOBILIZATION	LUMP SUM	ALL REQ'D.
641 (1)	EROSION, SEDIMENT AND POLLUTION CONTROL ADMINISTRATION	LUMP SUM	ALL REQ'D.
641 (2)	TEMPORARY EROSION, SEDIMENT AND POLLUTION CONTROL	CONTINGENT SUM	ALL REQ'D.
642 (1)	CONSTRUCTION SURVEYING	LUMP SUM	ALL REQ'D.
643 (2)	TRAFFIC MAINTENANCE	LUMP SUM	ALL REQ'D.
643 (29)	PUBLIC INFORMATION PROGRAM	LUMP SUM	ALL REQ'D.
644 (1)	FIELD OFFICE	LUMP SUM	ALL REQ'D.
662 (1)	TELECOMMUNICATION CONDUIT (APPROXIMATELY 500 LF)	LUMP SUM	ALL REQ'D.

JSK 27/83

New Items Established By Change Order

202(18)	CO#3	Remove Framing as Directed	MBM	17.30360
203(20)	CO#3	Special Excavation	LS	All Required
203(21)	CO#2	Additional Unclassified Excavation	CY	295.00
203(22)	CO#3	Clean up Landslide	L.S.	All Required
501(10)	CO#3	Extra Work & Repair Concrete Footer	L.S.	All Required
506(14)	CO#3	Added Timber Connections	L.S.	All Required
506(15)	CO#3	Column Base Hold Down Connections	L.S.	All Required
506(16)	CO#3	Deck Repairs	L.S.	All Required
506(17)	CO#3	Trim Existing Column	each	31.0
506(18)	CO#3	Remove Pinned Connections	L.S.	All Required
506(19)	CO#3	Repair Rockfall Damage	L.S.	All Required
507(17)	CO#1	Handrail	L.S.	All Required

PLANS PREPARED BY
PND ENGINEERS, INC.

DO NOT SCALE FROM THESE DRAWINGS USE DIMENSIONS

CHECKED BY: CMG
DESIGNED BY: MDS
DRAWN BY: PJD

STATE OF ALASKA
DEPARTMENT OF TRANSPORTATION
& PUBLIC FACILITIES
SOUTHEAST REGION

JUNEAU BRIDGE REPAIR & UPGRADE
BASIN ROAD TRESTLE BRIDGE NO.948
ESTIMATE OF QUANTITIES & WORK SUMMARY

PATH: N:\09XXX\092025 BASIN ROAD TRESTLE\D- DRAWINGS\PND\FINAL DESIGN\ADDENDUM #1\ADDEMDEM-1.DWG
TAB: A2 Monday, January 24, 2011 LANCE GREER

REVISIONS NO.	DATE	DESCRIPTION	PROJECT DESIGNATION	YEAR	SHEET NO.	TOTAL SHEETS
⚠2	5/10/11	QUANTITY REVISION	68979/BR-0003(144)	2010	A2	58

STRUCTURAL GENERAL NOTES

CRITERIA:

CODE:

AASHTO STANDARD SPECIFICATIONS FOR HIGHWAY BRIDGES 17TH EDITION 2002.

LOADS:

PER PROVISIONS IN 17TH EDITION OF AASHTO STANDARD SPECIFICATIONS OF HIGHWAY BRIDGES.

LIVE LOAD: HS-20 TRUCK LOAD

RAIL: THE RAIL ASSEMBLY IS AN EQUIVALENT CRASH TEST RAIL. THE RAIL ASSEMBLY SATISFIES NCHRP REPORT 350: TL4 BUT HAS BEEN MODIFIED TO INCLUDE A PEDESTRIAN RAIL. RAIL LOADINGS COMPLY WITH AASHTO, STANDARD SPECIFICATIONS FOR HIGHWAY BRIDGES 17TH EDITION 2002 CHAPTER 2.7.1-2.7.2

DEMOLITION

REMOVE ALL BRIDGE RAILS, WEAR DECKS, STRUCTURAL DECK AND CROSS-BRACING. AS EXISTING TIMBER DECK IS REMOVED, IN PRESENCE OF THE ENGINEER, INSPECT EXISTING STRINGERS AND CAP BEAMS FOR SIGNS OF DETERIORATION. AS DIRECTED BY THE ENGINEER, REPLACE OR REPAIR MEMBER. REMOVE EXISTING BRIDGE MEMBERS IN A MANNER AS TO NOT DAMAGE SURROUNDING BRIDGE MEMBERS.

EXCAVATION

CLEAR ALL DEBRIS AND LOOSE SOIL AROUND ALL CONCRETE COLUMN SUPPORTS. AVOID CAUSING LOOSE DEBRIS FROM SLIDING DOWN HILL AND IMPACTING EXISTING TIMBER MEMBERS. EXAMINE ANY TIMBER MEMBERS THAT ARE COVERED. IF TIMBER IS FOUND TO BE DETERIORATED, REPLACE OR REPAIR AS DIRECTED BY THE ENGINEER.

CONCRETE

CLASS A CONCRETE:

f'_c = 4,000 psi (28-DAY STRENGTH)

FOR REINFORCING STEEL COMPLY WITH SUBSECTION 503.

GROUT

USE NON-SHRINK GROUT PER SUBSECTION 701-2.03

TIMBER

UNLESS NOTED OTHERWISE, USE SAWN LUMBER AND TIMBER, S4S DOUGLAS FIR NUMBER 1 OR BETTER, VISUALLY GRADED IN ACCORDANCE WITH WESTERN WOOD PRODUCTS ASSOCIATION LATEST GRADING RULES. FOR RUNNING DECK MEMBERS USE ALASKA HEMLOCK NO. 3 GRADE OR OF A BETTER GRADE, UNTREATED.

FOR GLUE-LAMINATED TIMBER DECK PANELS COMPLY WITH AITC/ANSI A190.1, MADE WITH DOUG FIR, COMBINATION NUMBER 2, GRADE L2, VISUALLY GRADED WESTERN SPECIES, WITH ALL LAMINATIONS OF THE SAME GRADE MATERIAL.

UNLESS NOTED OTHERWISE, PRESSURE PRESERVATIVE TREAT ALL TIMBER ACCORDING TO AWPA C2 STANDARDS AND AS FOLLOWS:

MEMBER	TREATMENT	RETENTION
SAWN LUMBER	CREOSOTE	12 LBS/FT3
GLUE-LAMINATED BRIDGE DECK PANELS	CREOSOTE	12 LBS/FT3
ALL GUARD RAIL MEMBERS	ACZA	0.4 LBS/FT3

FABRICATE AND DRILL TIMBERS AS MUCH AS POSSIBLE BEFORE PRESSURE TREATMENT.

DRILL DECK DOWEL HOLES PRIOR TO PRESSURE TREATMENT. FIELD TREAT FIELD CUTS, FIELD DRILLED HOLES, AND MINOR DAMAGE TO NEW AND EXISTING TIMBERS PER AWPA M-4 USING COPPER NAPHTHENATE. FOLLOWING APPLICATION OF COPPER NAPTHENATE, SWAB FIELD DRILLED HOLES WITH MASTIC SEALER. SCATTER NAIL GLUE-LAMINATED TIMBER ENDS THAT HAVE BEEN CUT AFTER TREATMENT WITH 10d COPPER NAILS AT 2 INCH-ON-CENTER EACH WAY IN ADDITION TO FIELD TREATMENT.

INSTALL GALVANIZED MALLEABLE IRON WASHERS AT ALL BOLTS WITH HEAD AND NUT IN CONTACT WITH TIMBER UNDER THE HEAD AND NUT. USE MALLEABLE IRON WASHER COMPLYING WITH SECTION 719.

INSTALL HOT DIP GALVANIZED, ¼"Φ WOOD METAL STEEL SCREWS WITH A TYPE 17 SCREW TIP AT DECK PANELS. SCREW HEAD OF WOOD SCREW FLUSH WITH THE TOP OF THE DECK PANEL.

SHOP MATCH DECK PANEL EDGES AND VERIFY DOWEL ALIGNMENT WITH ADJACENT PANELS. CLEARLY LABEL PANELS FOR EFFICIENT FIELD ERECTION.

STEEL:

CONFORM STRUCTURAL STEEL TO THE FOLLOWING:

PLATE	ASTM A36
BOLTS	ASTM A307
ANCHOR BOLTS	ASTM F1554

HOT-DIPP GALVANIZE ALL STRUCTURAL STEEL AFTER FABRICATION PER ASTM A123 OR A153 AS APPROPRIATE UNLESS OTHERWISE NOTED.

COATING REPAIR

REPAIR GALVANIZED OR SPRAY METALIZED COATINGS DAMAGED OR REMOVED DUE TO FABRICATION, SHIPPING, HANDLING OR WELDING BY USING THE FOLLOWING HOT-APPLIED REPAIR STICK METHOD:

1. USE REPAIR STICKS MEETING THE FOLLOWING PROPERTIES:
   ZINC-CADMIUM ALLOYS (MELTING POINT 518°-527°F) OR ZINC-TIN-LEAD ALLOYS (MELTING POINT 446°-500°F). CONFORM THE ZINC-TIN-LEAD ALLOYS WITH U.S. FEDERAL SPECIFICATION O-G-93 CONTAINING FLUXING AGENTS.

2. REMOVE WELDING SLAG BY CHIPPING HAMMER AND CLEAN WELD OR DAMAGED AREA BY VIGOROUS WIRE BRUSHING.

3. PREHEAT THE REGION TO BE REPAIRED BY MEANS OF AN OXYACETYLENE TORCH OR OTHER CONVENIENT METHOD TO BETWEEN 600°F AND 750°F. THE ALLOYS DO NOT SPREAD WELL AT TEMPERATURES BELOW 600°F AND AS TEMPERATURES RISE ABOVE 600°F, INCREASING AMOUNTS OF DROSS FORMS.

4. WIRE BRUSH SURFACE AGAIN.

5. APPLY COATING BY RUBBING BAR OF THE ALLOY OVER THE HEATED SURFACE WHILE IT IS HOT ENOUGH TO MELT THE ALLOY.

6. SPREAD THE MOLTEN ALLOY BY BRISKLY WIRE BRUSHING OR RUBBING WITH A FLAT EDGE STRIP OF STEEL OR PALETTE KNIFE.

7. REMOVE FLUX RESIDUES BY WIPING WITH A DAMP CLOTH OR RINSING WITH WATER.

8. BRUSH APPLY TWO COATS OF ZINC RICH PAINT, ZRC OR EQUAL (COLD GALVANIZE REPAIR), MINIMUM 3 MILS PER COAT, WHILE STEEL IS WARM FROM ZINC ALLOY APPLICATION.

ABBREVIATIONS

ACP	ASPHALT CONCRETE PAVEMENT
AITC	AMERICAN INSTITUTE FOR TIMBER CONSTRUCTION
AISC	AMERICAN INSTITUTE OF STEEL CONSTRUCTION
ALT	ALTERNATE
AASHTO	AMERICAN ASSOCIATION OF STATE HIGHWAY AND TRANSPORTATION OFFICIALS
ASTM	AMERICAN SOCIETY FOR TESTING AND MATERIALS
AWPA	AMERICAN WOOD PRESERVER'S ASSOCIATION
BLKG	BLOCKING
BOP	BEGINNING OF POSITION
BTWN	BETWEEN
℄	CENTERLINE
CLR	CLEAR
CONC	CONCRETE
CY	CUBIC YARD
DBL	DOUBLE
EA	EACH
ELEV.	ELEVATION
EMBED	EMBEDMENT
EOP	END OF POSITION
FS	FAR SIDE
FTG	FOOTING
HF	HEM FIR
GALV	GALVANIZED
GLB	GLU LAM BEAM
MAX	MAXIMUM
MIN	MINIMUM
MPH	MILES PER HOUR
NO.	NUMBER
NS	NEAR SIDE
O.C.	ON CENTER
PC	POINT OF CURVATURE
ℙ	PLATE
PRC	POINT OF REVERSE CURVATURE
PSI	POUNDS PER SQUARE INCH
PT	POINT OF TANGENCY
REQ'D	REQUIRED
SCHED	SCHEDULE
SIM	SIMILAR
STD	STANDARD
STR	STRUCTURAL
TRTD	PRESSURE TREATED
TYP.	TYPICAL
W.P.	WORK POINT
U.N.O.	UNLESS NOTED OTHERWISE

JSK 28/83

DO NOT SCALE FROM THESE DRAWINGS USE DIMENSIONS

CHECKED BY: CMG

STATE OF ALASKA — Christopher Gianotti — Jan 24, 2011 — CE-7359 — REGISTERED PROFESSIONAL ENGINEER

DESIGNED BY: MDS

DRAWN BY: PJD

STATE OF ALASKA
DEPARTMENT OF TRANSPORTATION
& PUBLIC FACILITIES
SOUTHEAST REGION

JUNEAU BRIDGE REPAIR
& UPGRADE
BASIN ROAD TRESTLE BRIDGE
NO.948

GENERAL NOTES
& ABBREVIATIONS

PATH: N:\09XXX\092025 BASIN ROAD TRESTLE\D- DRAWINGS\PND\FINAL DESIGN\A1_A2_A3_S1.DWG
TAB: A3 Monday, January 24, 2011 2:38:53 PM KATHERINE LUNDQUIST

REVISIONS NO.	DATE	DESCRIPTION	PROJECT DESIGNATION	YEAR	SHEET NO.	TOTAL SHEETS
			68979/BR-0003(144)	2010	A3	58

PLANS PREPARED BY
PND ENGINEERS, INC.

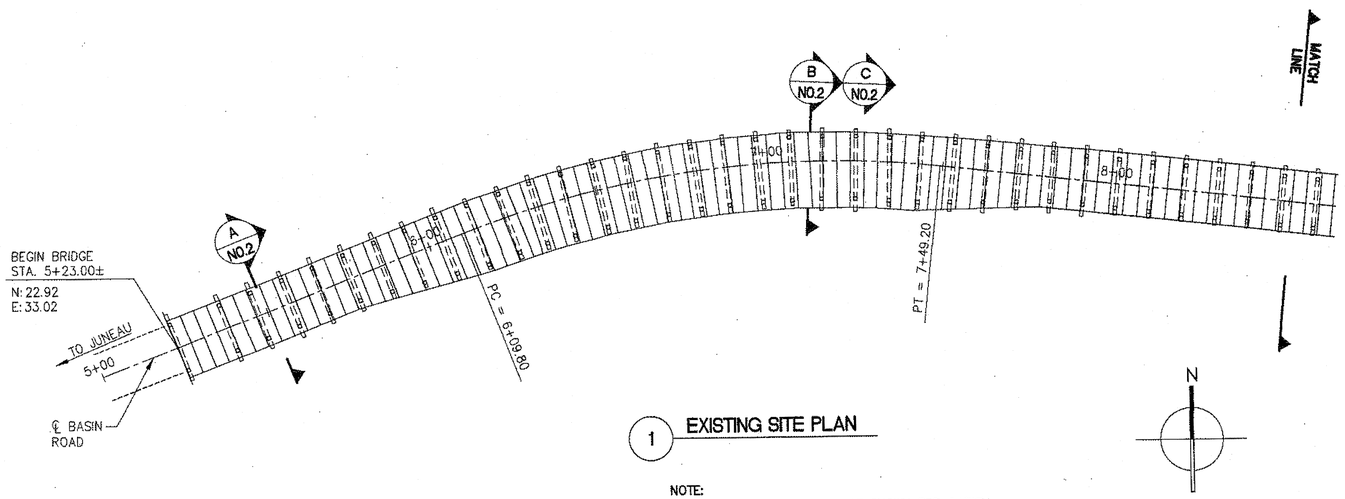

1 EXISTING SITE PLAN

NOTE:
EXISTING RAILS AND DECK NOT SHOWN FOR CARITY.

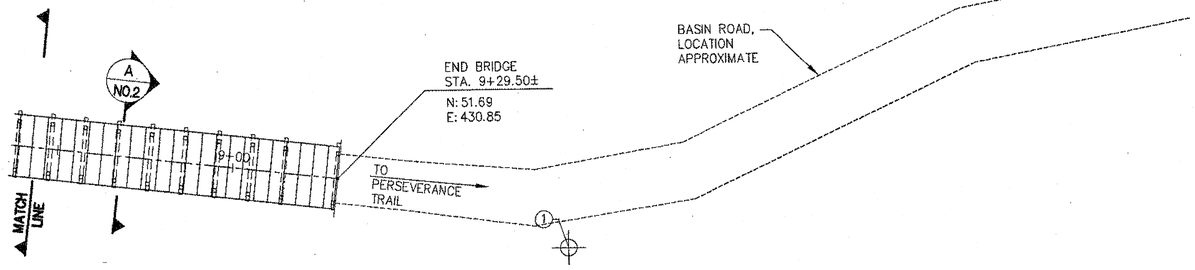

SURVEY CONTROL				
POINT	NORTHING	EASTING	ELEVATION	DESCRIPTION
①	35.15	496.75	100 FT.	PK NAIL
②	105.36	654.80	ELEV.=101.48	AL CAP, R&M "GOLD 2" 1990

NOTE:
1. COORDINATES ARE A LOCAL COORDINATE SYSTEM, BY PND SURVEY CONDUCTED IN MAY OF 2009.

JSK 29/83

DO NOT SCALE FROM THESE DRAWINGS USE DIMENSIONS

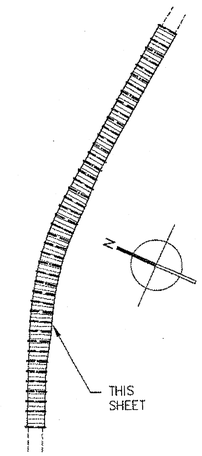

PLAN LEGEND

PATH: N:\09XXX\092025 BASIN ROAD TRESTLE\D-DRAWINGS\PND\FINAL DESIGN\N0.1.DWG
KATHERINE LUNDQUIST
TAB: N0.1 Monday, January 24, 2011 11:30:54 AM

ADDENDUM NUMBER

ATTACHMENT NUMBER

RECORD OF REVISIONS

No.	DATE	DESCRIPTION

CHECKED BY: CMG

STATE OF ALASKA
Christopher Gianotti
Jan 24, 2011
CE-7559
REGISTERED PROFESSIONAL ENGINEER

PLANS PREPARED BY PND ENGINEERS, INC.

DESIGNED BY: MDS

DRAWN BY: PJD

STATE OF ALASKA
DEPARTMENT OF TRANSPORTATION
& PUBLIC FACILITIES
SOUTHEAST REGION

JUNEAU BRIDGE REPAIR & UPGRADE
BASIN ROAD TRESTLE BRIDGE NO.948

OVERALL PLAN w/ SURVEY CONTROL

PROJECT DESIGNATION	
68979/BR-0003(144)	
STATE	YEAR
ALASKA	2010
SHEET NUMBER	TOTAL SHEETS
N0.1	58

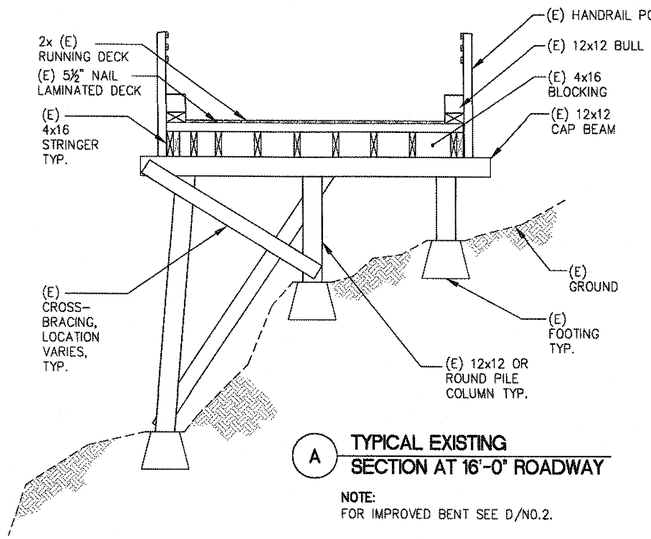

A **TYPICAL EXISTING SECTION AT 16'-0" ROADWAY**

NOTE:
FOR IMPROVED BENT SEE D/NO.2.

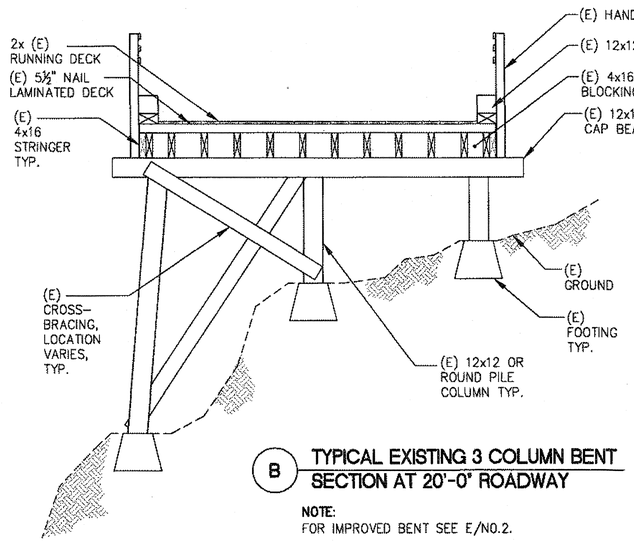

B **TYPICAL EXISTING 3 COLUMN BENT SECTION AT 20'-0" ROADWAY**

NOTE:
FOR IMPROVED BENT SEE E/NO.2.

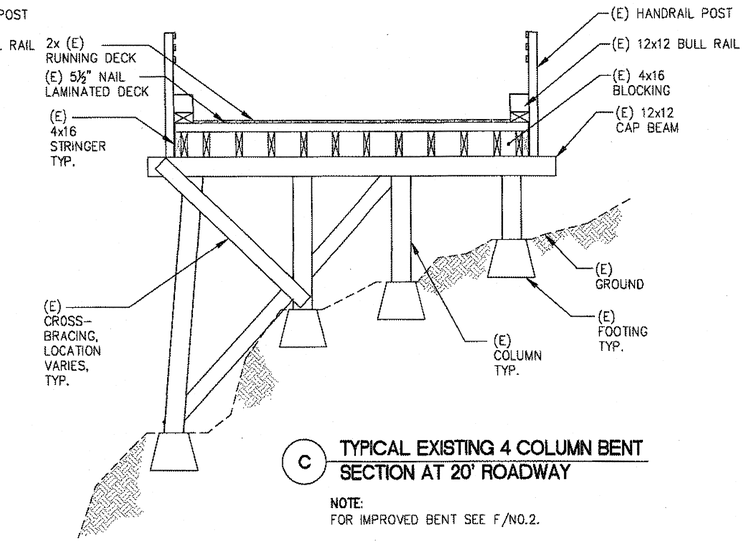

C **TYPICAL EXISTING 4 COLUMN BENT SECTION AT 20' ROADWAY**

NOTE:
FOR IMPROVED BENT SEE F/NO.2.

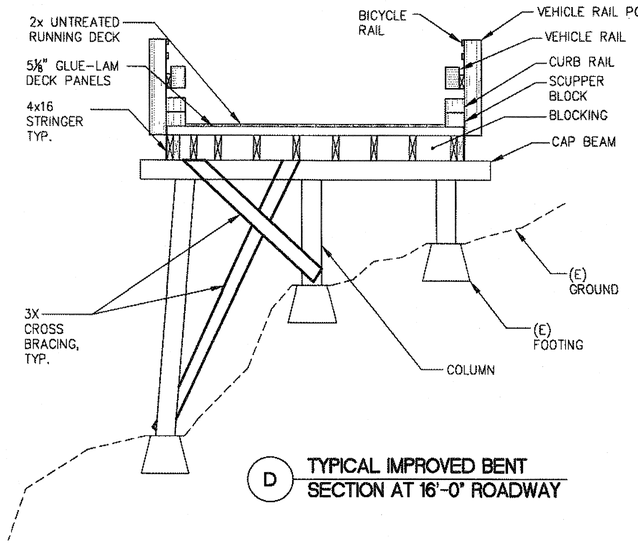

D **TYPICAL IMPROVED BENT SECTION AT 16'-0" ROADWAY**

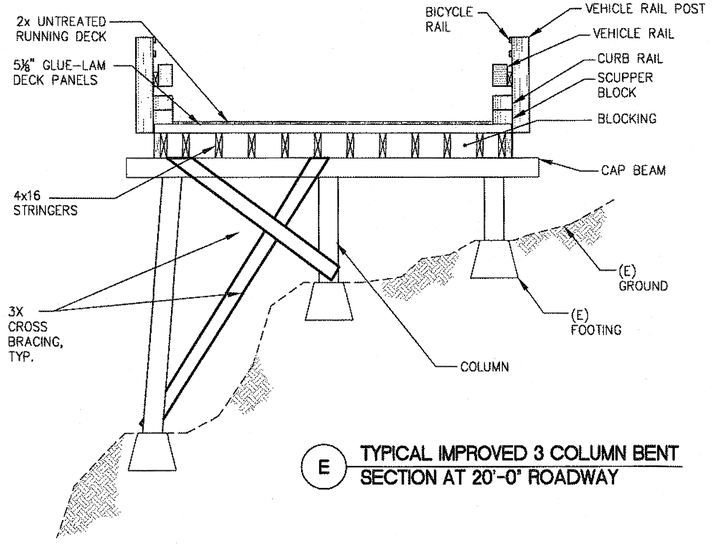

E **TYPICAL IMPROVED 3 COLUMN BENT SECTION AT 20'-0" ROADWAY**

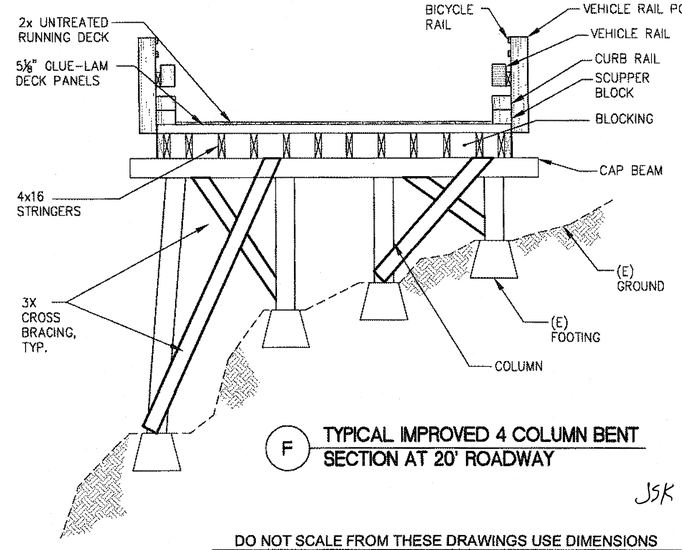

F **TYPICAL IMPROVED 4 COLUMN BENT SECTION AT 20' ROADWAY**

JSK 30/83

DO NOT SCALE FROM THESE DRAWINGS USE DIMENSIONS

CHECKED BY:	CMG
DESIGNED BY:	MDS
DRAWN BY:	PJD

STATE OF ALASKA
DEPARTMENT OF TRANSPORTATION
& PUBLIC FACILITIES
SOUTHEAST REGION

JUNEAU BRIDGE REPAIR & UPGRADE
BASIN ROAD TRESTLE BRIDGE NO.948

TYPICAL BRIDGE SECTIONS

PATH: N:\09XXX\092025 BASIN ROAD TRESTLE\D- DRAWINGS\PND\FINAL DESIGN\DEMO_DECK_RAIL PLAN.DWG
TAB: N0.2 Monday, January 24, 2011 3:24:02 PM KATHERINE LUNDQUIST

PLANS PREPARED BY
PND ENGINEERS, INC.

REVISIONS NO.	DATE	DESCRIPTION	PROJECT DESIGNATION	YEAR	SHEET NO.	TOTAL SHEETS
			68979/BR-0003(144)	2010	N0.2	58

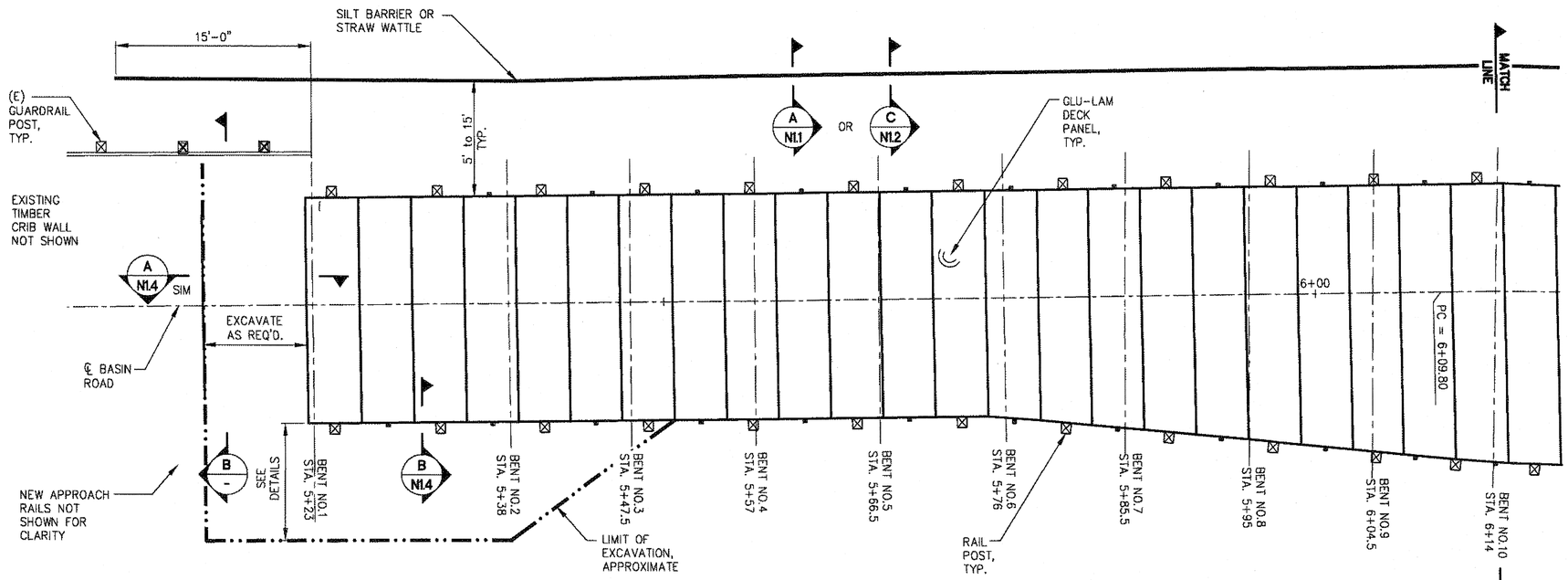

1 EROSION/SEDIMENT CONTROL AND EXCAVATION PLAN
BENT NO. 1 TO BENT NO. 10

SCALE IN FEET
0 5 10 FT.

N

NOTES:

1. STRINGERS, CAP BEAMS, POSTS, BRIDGE RAIL, APPROACH RAIL AND CROSS BRACING NOT SHOWN.
2. ---·---·--- INDICATES APPROXIMATE UPHILL LIMIT OF EXCAVATION.
3. ——— INDICATES APPROXIMATE LOCATION OF STRAW WATTLE.

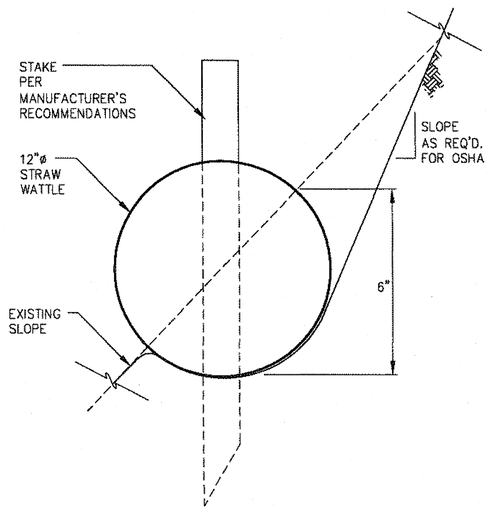

A TYPICAL STRAW WADDLE SECTION
NTS

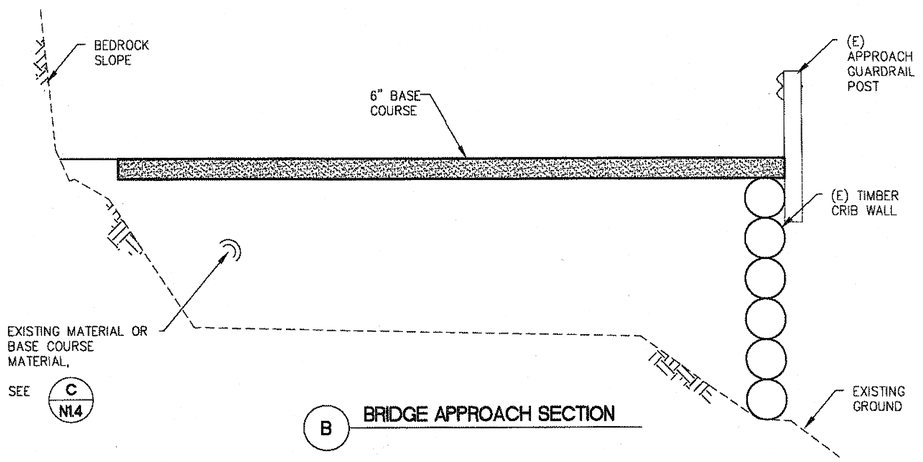

B BRIDGE APPROACH SECTION

JSK 31/83

DO NOT SCALE FROM THESE DRAWINGS USE DIMENSIONS

PATH: N:\09XXX\092025 BASIN ROAD TRESTLE\D-DRAWINGS\PND\FINAL DESIGN\DEMO_DECK_RAIL PLAN.DWG
KATHERINE LUNDQUIST
TAB: N1.1 Monday, January 24, 2011 3:24:15 PM

ADDENDUM NUMBER

ATTACHMENT NUMBER

RECORD OF REVISIONS

No.	DATE	DESCRIPTION

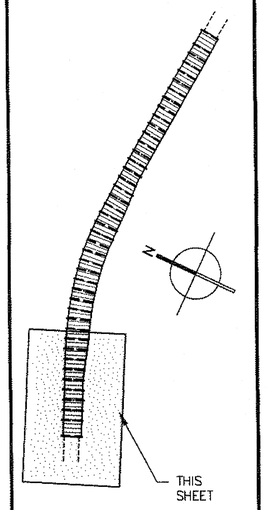

PLAN LEGEND

CHECKED BY: CMG

STATE OF ALASKA
Christopher Gianotti
Jan 24, 2011
CE-7559
REGISTERED PROFESSIONAL ENGINEER

PLANS PREPARED BY PND ENGINEERS, INC.

DESIGNED BY: MDS

DRAWN BY: PJD

STATE OF ALASKA
DEPARTMENT OF TRANSPORTATION & PUBLIC FACILITIES
SOUTHEAST REGION

JUNEAU BRIDGE REPAIR & UPGRADE
BASIN ROAD TRESTLE BRIDGE NO.948

EROSION/SEDIMENT EXCAVATION PLANS

PROJECT DESIGNATION	
68979/BR-0003(144)	
STATE	YEAR
ALASKA	2010
SHEET NUMBER	TOTAL SHEETS
N1.1	58

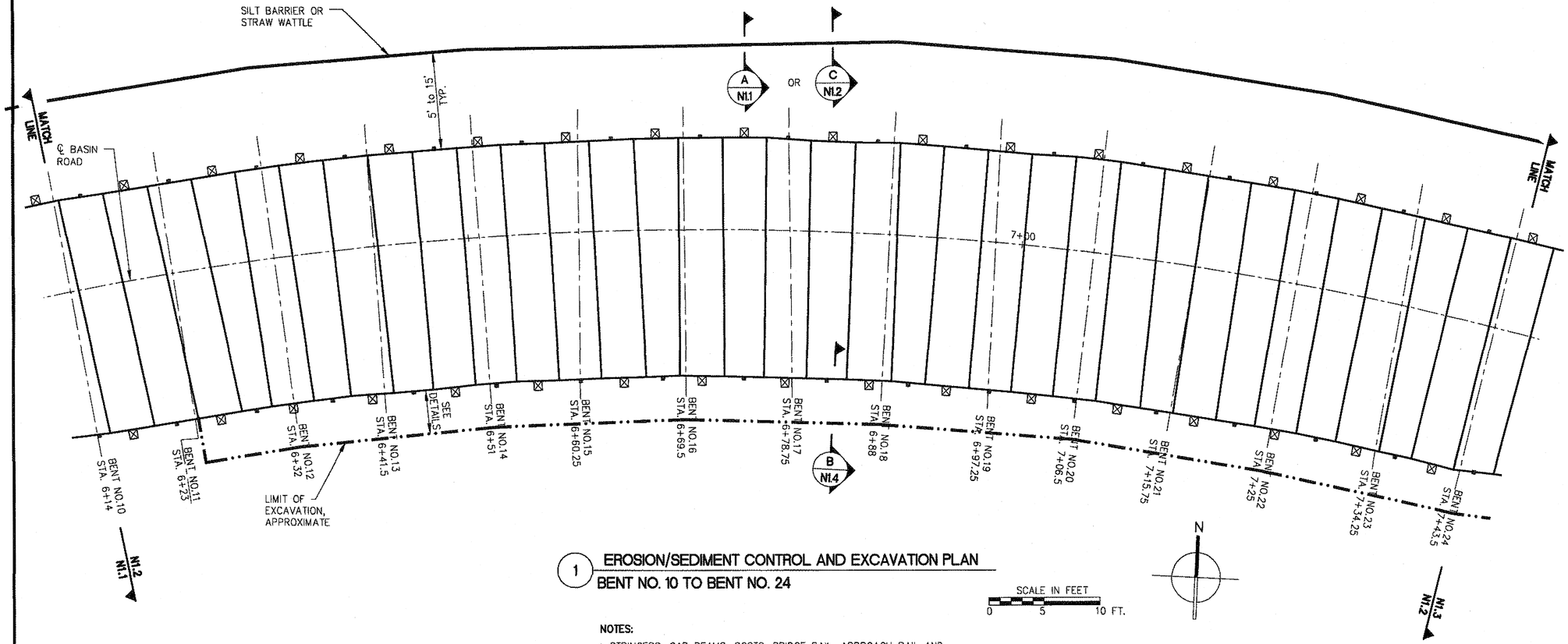

1 EROSION/SEDIMENT CONTROL AND EXCAVATION PLAN
BENT NO. 10 TO BENT NO. 24

NOTES:

1. STRINGERS, CAP BEAMS, POSTS, BRIDGE RAIL, APPROACH RAIL AND CROSS BRACING NOT SHOWN.
2. — · — · — INDICATES APPROXIMATE UPHILL LIMIT OF EXCAVATION.
3. ——— INDICATES APPROXIMATE LOCATION OF STRAW WATTLE.

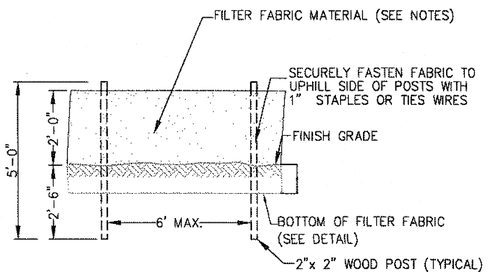

B TYPICAL SILT BARRIER ELEVATION

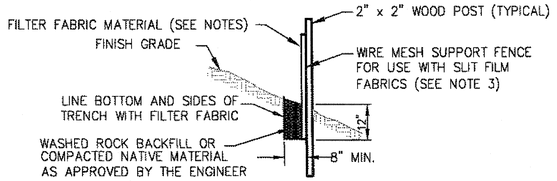

C TYPICAL SILT BARRIER SECTION

NOTES:

1. CUT FILTER FABRIC FROM A CONTINOUS ROLL OF FABRIC. MINIMIZE JOINTS. LOCATE JOINTS AT SUPPORT POSTS WITH A MINIMUM OF 6" OVERLAP.
2. OBTAIN APPROVAL FROM ENGINEER FOR FILTER FABRIC TYPE.
3. MORE SUPPORT POSTS MAY BE SUBSTITUTED FOR WIRE MESH AS APPROVED BY THE ENGINEER.
4. REMOVE FILTER FABRIC FENCE AFTER UPSLOPE HAS BEEN STABILIZED. REMOVE RETAINED MATERIALS FROM SITE AND PROPERLY DISPOSE OF.

DO NOT SCALE FROM THESE DRAWINGS USE DIMENSIONS

PATH: N:\09XXX\092025 BASIN ROAD TRESTLE\D-DRAWINGS\PND\FINAL DESIGN\DEMO_DECK_RAIL PLAN.DWG
KATHERINE LUNDQUIST
TAB: N1.2 Monday, January 24, 2011 3:24:24 PM

ADDENDUM NUMBER

ATTACHMENT NUMBER

RECORD OF REVISIONS

No.	DATE	DESCRIPTION

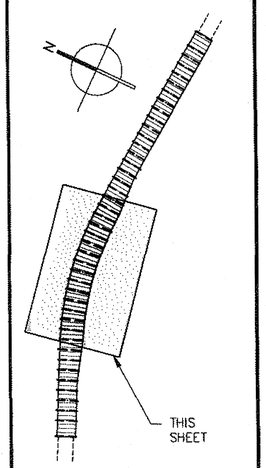

PLAN LEGEND

CHECKED BY: CMG

STATE OF ALASKA — REGISTERED PROFESSIONAL ENGINEER — Christopher Connelly — Jan 24, 2011 — CE-7559

JSK 32/83

PLANS PREPARED BY PND ENGINEERS, INC.

DESIGNED BY: MDS

DRAWN BY: PJD

STATE OF ALASKA
DEPARTMENT OF TRANSPORTATION & PUBLIC FACILITIES
SOUTHEAST REGION

JUNEAU BRIDGE REPAIR & UPGRADE
BASIN ROAD TRESTLE BRIDGE NO.948

EROSION/SEDIMENT EXCAVATION PLANS

PROJECT DESIGNATION
68979/BR-0003(144)

STATE	YEAR
ALASKA	2010
SHEET NUMBER	TOTAL SHEETS
N1.2	58

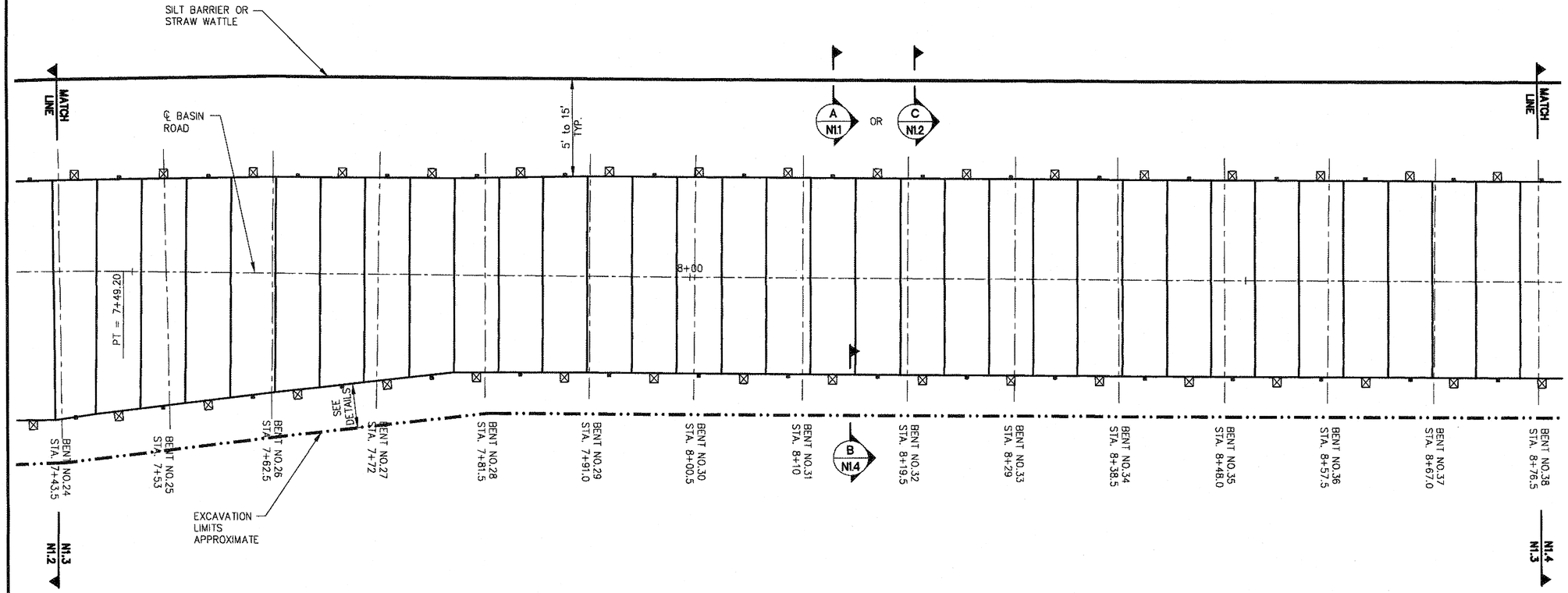

1 EROSION/SEDIMENT CONTROL AND EXCAVATION PLAN
BENT NO. 24 TO BENT NO. 38

SCALE IN FEET
0 5 10 FT.

N

NOTES:

1. STRINGERS, CAP BEAMS, POSTS, BRIDGE RAIL, APPROACH RAIL AND CROSS BRACING NOT SHOWN.
2. ---·---·--- INDICATES APPROXIMATE UPHILL LIMIT OF EXCAVATION.
3. ——— INDICATES APPROXIMATE LOCATION OF STRAW WATTLE.

JSK 33/83

DO NOT SCALE FROM THESE DRAWINGS USE DIMENSIONS

PATH: N:\09XXX\092025 BASIN ROAD TRESTLE\D-DRAWINGS\PND\FINAL DESIGN\DEMO_DECK_RAIL PLAN.DWG
KATHERINE LUNDQUIST
TAB: N1.3 Monday, January 24, 2011 3:24:34 PM

ADDENDUM NUMBER
ATTACHMENT NUMBER

RECORD OF REVISIONS

No.	DATE	DESCRIPTION

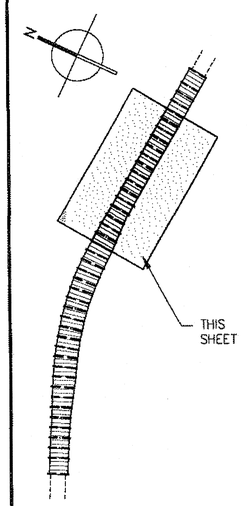

PLAN LEGEND

CHECKED BY: CMG



PLANS PREPARED BY PND ENGINEERS, INC.

DESIGNED BY: MDS

DRAWN BY: PJD

STATE OF ALASKA
DEPARTMENT OF TRANSPORTATION & PUBLIC FACILITIES
SOUTHEAST REGION

JUNEAU BRIDGE REPAIR & UPGRADE
BASIN ROAD TRESTLE BRIDGE NO.948

EROSION/SEDIMENT EXCAVATION PLANS

PROJECT DESIGNATION	
68979/BR-0003(144)	
STATE	YEAR
ALASKA	2010
SHEET NUMBER	TOTAL SHEETS
N1.3	58

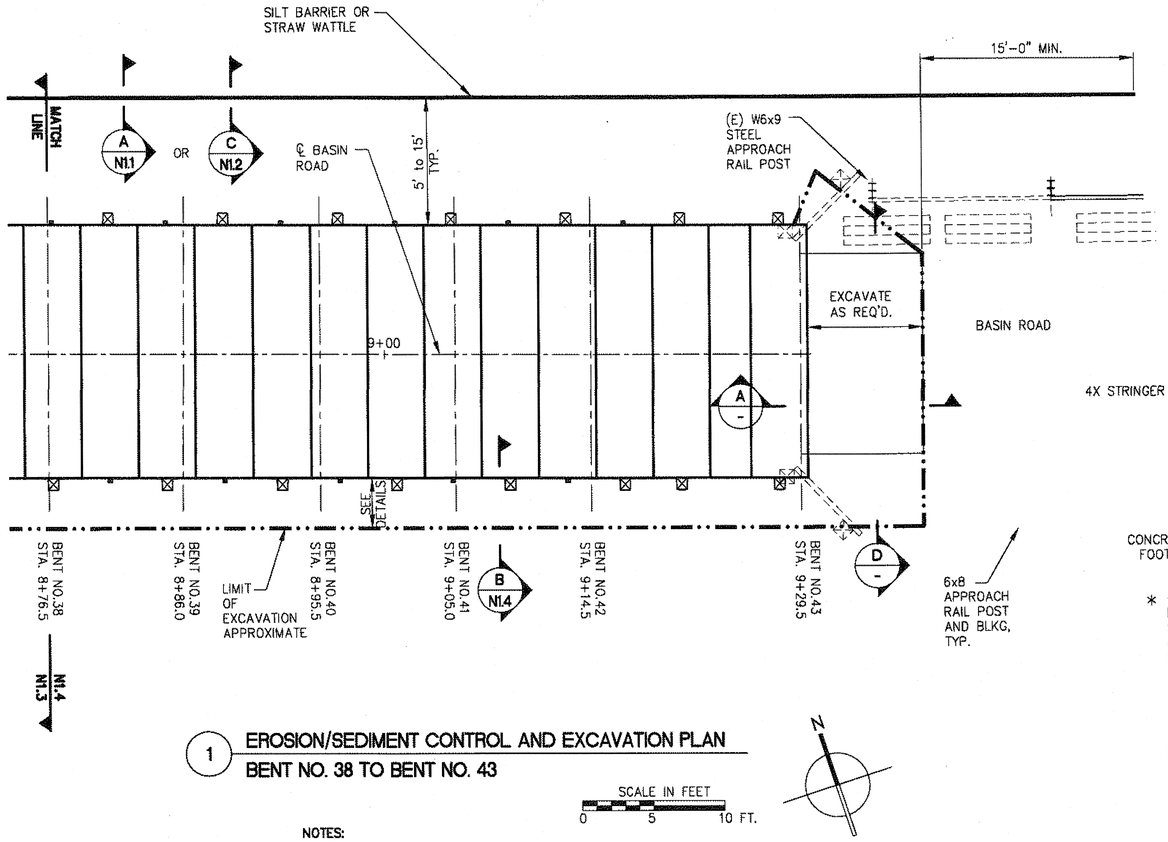

1 EROSION/SEDIMENT CONTROL AND EXCAVATION PLAN
BENT NO. 38 TO BENT NO. 43

SCALE IN FEET
0 5 10 FT.

N

NOTES:
1. STRINGERS, CAP & BEAMS, POSTS, BRIDGE RAIL, APPROACH RAIL AND CROSS BRACING NOT SHOWN.
2. - - - - INDICATES APPROXIMATE UPHILL LIMIT OF EXCAVATION.
3. ——— INDICATES APPROXIMATE LOCATION OF STRAW WATTLE.

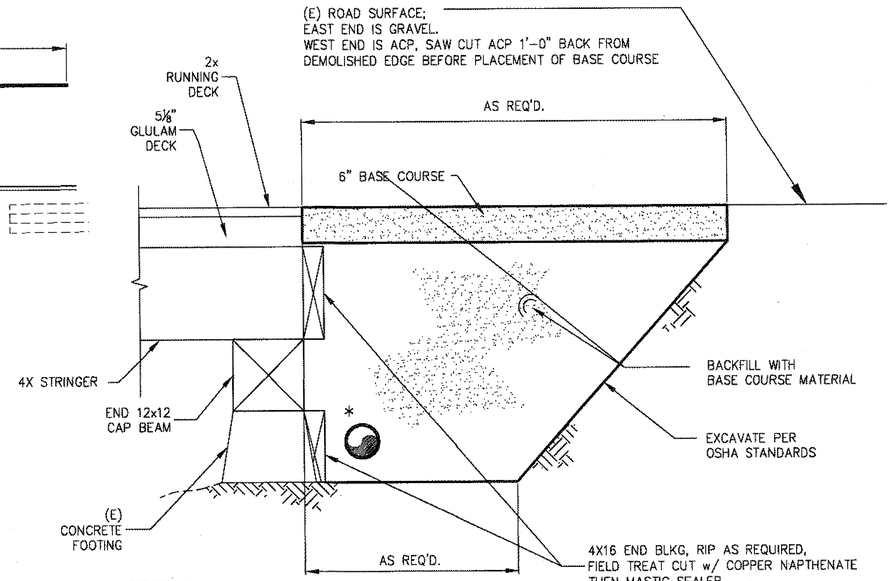

* 4"ø PERFORATED HDPE DRAIN PIPE SURROUNDED BY 6" EA SIDE OF WASHED DRAIN ROCK, USE 1" TO 2" DRAIN ROCK UNIFORMLY GRADED, EXTEND DRAIN PIPE TO DAYLIGHT

A TYPICAL ABUTMENT DETAIL

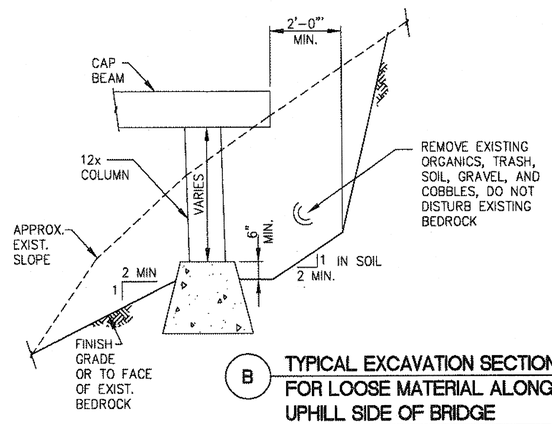

B TYPICAL EXCAVATION SECTION FOR LOOSE MATERIAL ALONG UPHILL SIDE OF BRIDGE

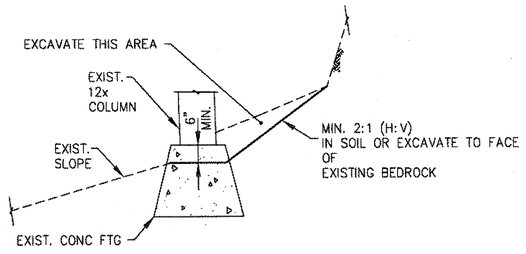

C TYPICAL EXCAVATION AND DEBRIS CLEARING AT ALL FOOTINGS

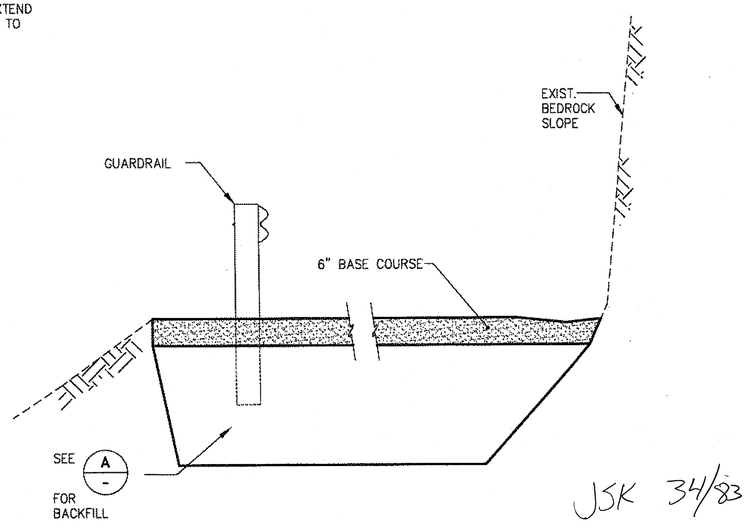

D BRIDGE APPROACH SECTION
EAST END

JSK 34/83

DO NOT SCALE FROM THESE DRAWINGS USE DIMENSIONS

PATH:N:\09XXX\092025 BASIN ROAD TRESTLE\D-DRAWINGS\PND\FINAL DESIGN\DEMO_DECK_RAIL PLAN.DWG
KATHERINE LUNDQUIST
TAB: N1.4 Monday, January 24, 2011 3:24:44 PM

ADDENDUM NUMBER
ATTACHMENT NUMBER

RECORD OF REVISIONS

No.	DATE	DESCRIPTION

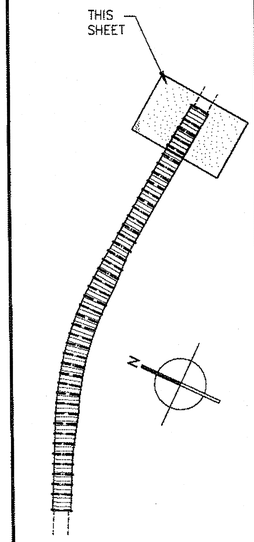

PLAN LEGEND

CHECKED BY: CMG

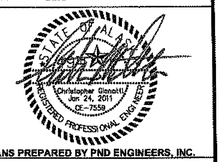

PLANS PREPARED BY PND ENGINEERS, INC.

DESIGNED BY: MDS

DRAWN BY: PJD

STATE OF ALASKA
DEPARTMENT OF TRANSPORTATION & PUBLIC FACILITIES
SOUTHEAST REGION

JUNEAU BRIDGE REPAIR & UPGRADE
BASIN ROAD TRESTLE BRIDGE NO.948

EROSION/SEDIMENT EXCAVATION PLANS

PROJECT DESIGNATION	
68979/BR-0003(144)	
STATE	YEAR
ALASKA	2010
SHEET NUMBER	TOTAL SHEETS
N1.4	58

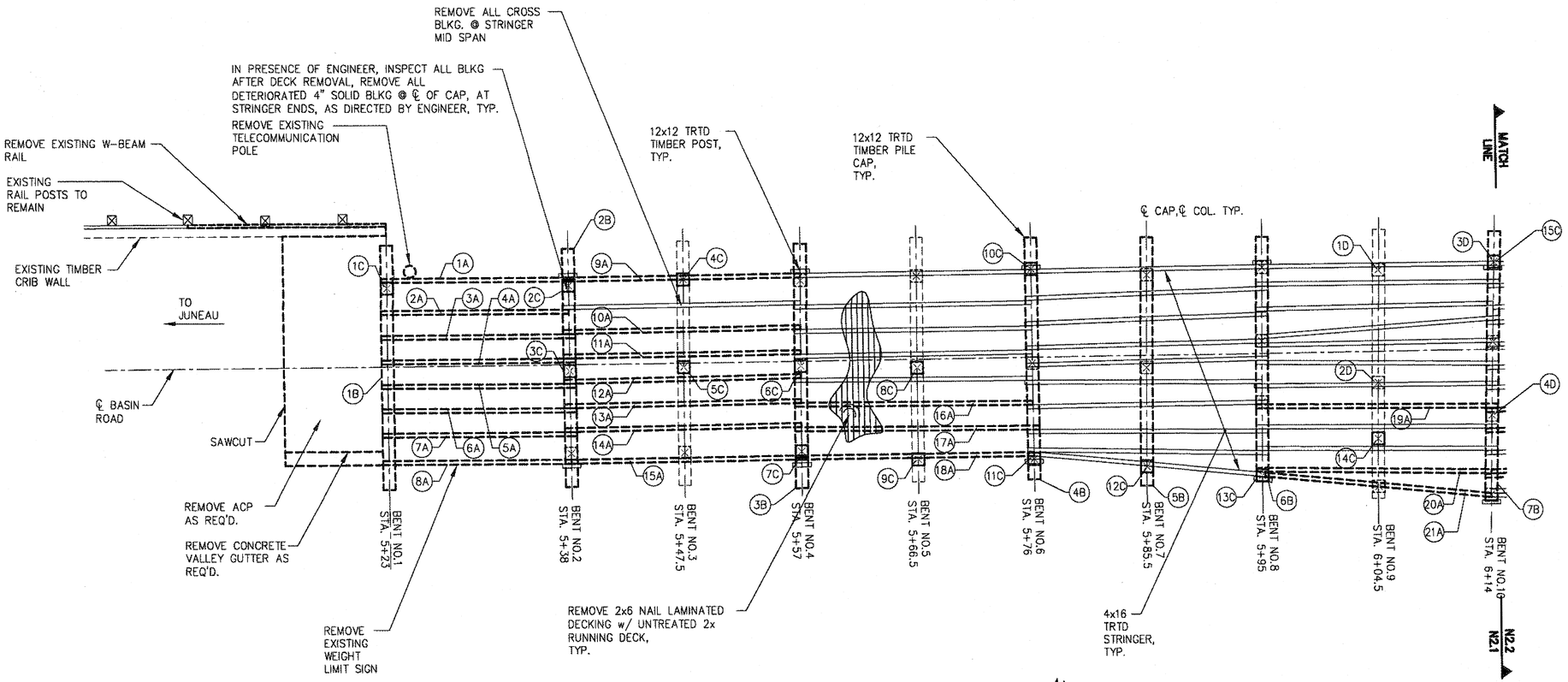

A TRESTLE DEMOLITION PLAN
BENT NO. 1 TO BENT NO. 10

SCALE IN FEET
0 5 10 FT.

N

NOTES:

1. REMOVE ALL RAILS (RAILS NOT SHOWN).
2. (#) INDICATES REPLACE OR REPAIR MEMBERS PER TABLES ON SHEETS N2.5 & N2.6.
3. ═══ INDICATES REPAIR OR REPLACE MEMBERS.
4. ═══ INDICATES EXISTING MEMBER TO REMAIN.
5. - - - - - INDICATES EXISTING MEMBER BELOW TO REMAIN.
6. IN PRESENCE OF ENGINEER, FIELD INSPECT ALL FRAMING TO REMAIN.
7. REMOVE ALL EXISTING OBSTRUCTION MARKERS AND BRIDGE WEIGHT LIMIT SIGNS. SALVAGE MATERIALS TO BE RE-USED.

See framing plan for additional removal and replacement.

JSK 35/83

DO NOT SCALE FROM THESE DRAWINGS USE DIMENSIONS

PATH: N:\09XXX\092025 BASIN ROAD TRESTLE\D-DRAWINGS\PND\FINAL DESIGN\DEMO_DECK_RAIL PLAN.DWG
KATHERINE LUNDQUIST
TAB: N2.1 Monday, January 24, 2011 3:24:54 PM

ADDENDUM NUMBER
ATTACHMENT NUMBER

RECORD OF REVISIONS

No.	DATE	DESCRIPTION

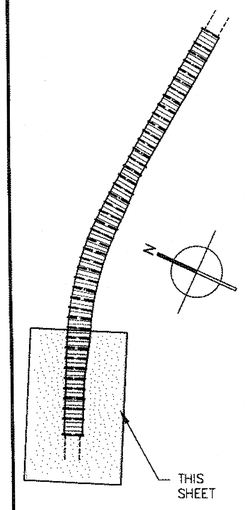

PLAN LEGEND

CHECKED BY: CMG

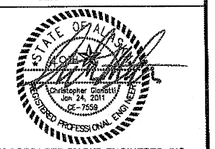

PLANS PREPARED BY PND ENGINEERS, INC.

DESIGNED BY: MDS

DRAWN BY: PJD

STATE OF ALASKA
DEPARTMENT OF TRANSPORTATION & PUBLIC FACILITIES
SOUTHEAST REGION

JUNEAU BRIDGE REPAIR & UPGRADE
BASIN ROAD TRESTLE BRIDGE NO.948

DEMOLITION PLANS

PROJECT DESIGNATION
68979/BR-0003(144)

STATE	YEAR
ALASKA	2010
SHEET NUMBER	TOTAL SHEETS
N2.1	58

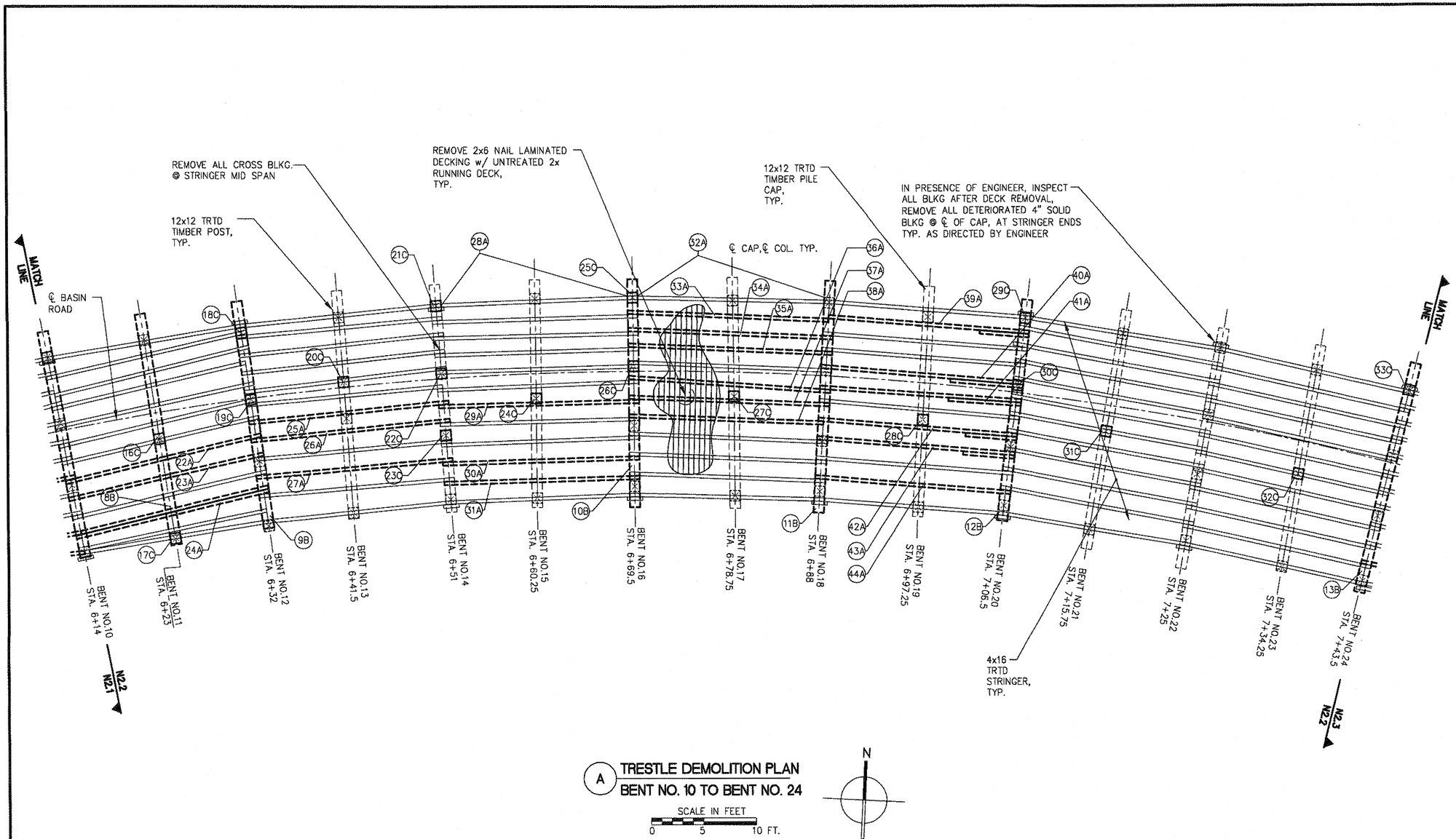

A TRESTLE DEMOLITION PLAN
BENT NO. 10 TO BENT NO. 24

SCALE IN FEET
0 5 10 FT.

N

NOTES:

1. REMOVE ALL RAILS (RAILS NOT SHOWN).
2. (#) INDICATES REPLACE OR REPAIR MEMBERS PER TABLES ON SHEETS N2.5 & N2.6.
3. ==== INDICATES REPAIR OR REPLACE MEMBERS.
4. ═══ INDICATES EXISTING MEMBER TO REMAIN.
5. - - - - - INDICATES EXISTING MEMBER BELOW TO REMAIN.
6. IN PRESENCE OF ENGINEER, FIELD INSPECT ALL FRAMING TO REMAIN

JSK 36/83

DO NOT SCALE FROM THESE DRAWINGS USE DIMENSIONS

PATH: N:\09XXX\092025 BASIN ROAD TRESTLE\D-DRAWINGS\PND\FINAL DESIGN\DEMO_DECK_RAIL PLAN.DWG
KATHERINE LUNDQUIST
TAB: N2.2 Monday, January 24, 2011 3:25:04 PM

ADDENDUM NUMBER

ATTACHMENT NUMBER

RECORD OF REVISIONS

No.	DATE	DESCRIPTION

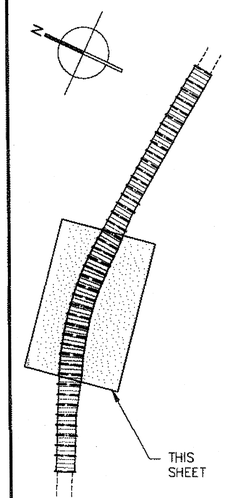

PLAN LEGEND

CHECKED BY: CMG



PLANS PREPARED BY PND ENGINEERS, INC.

DESIGNED BY: MDS

DRAWN BY: PJD

STATE OF ALASKA
DEPARTMENT OF TRANSPORTATION & PUBLIC FACILITIES
SOUTHEAST REGION

JUNEAU BRIDGE REPAIR & UPGRADE
BASIN ROAD TRESTLE BRIDGE NO.948

DEMOLITION PLANS

PROJECT DESIGNATION
68979/BR-0003(144)

STATE	YEAR
ALASKA	2010
SHEET NUMBER	TOTAL SHEETS
N2.2	58

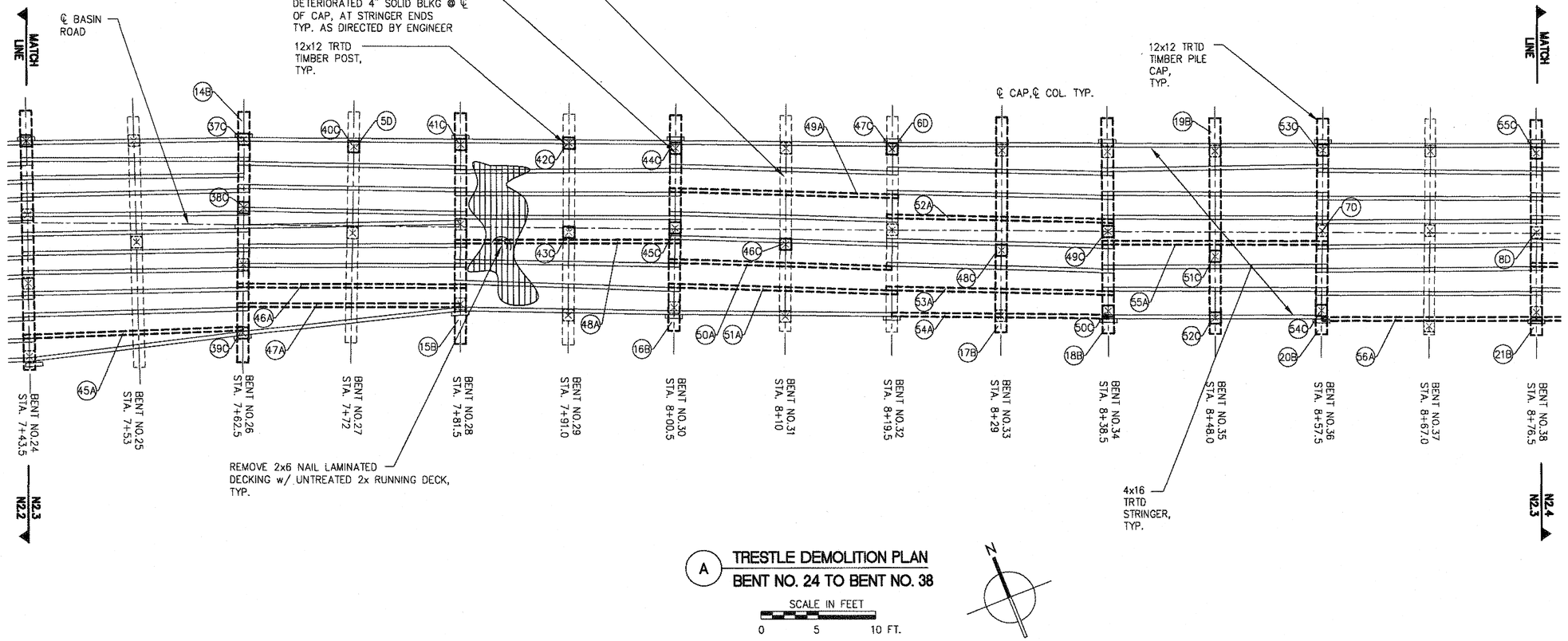

A TRESTLE DEMOLITION PLAN
BENT NO. 24 TO BENT NO. 38

SCALE IN FEET
0 5 10 FT.

NOTES:

1. REMOVE ALL RAILS (RAILS NOT SHOWN).
2. (#) INDICATES REPLACE OR REPAIR MEMBERS PER TABLES ON SHEETS N2.5 & N2.6.
3. ==== INDICATES REPAIR OR REPLACE MEMBERS.
4. ═══ INDICATES EXISTING MEMBER TO REMAIN.
5. - - - - - INDICATES EXISTING MEMBER BELOW TO REMAIN.
6. IN PRESENCE OF ENGINEER, FIELD INSPECT ALL FRAMING TO REMAIN

JSK 37/83

DO NOT SCALE FROM THESE DRAWINGS USE DIMENSIONS

PATH: N:\09XXX\092025 BASIN ROAD TRESTLE\D-DRAWINGS\PND\FINAL DESIGN\DEMO_DECK_RAIL PLAN.DWG
KATHERINE LUNDQUIST
TAB: N2.3 Monday, January 24, 2011 3:25:14 PM

ADDENDUM NUMBER

ATTACHMENT NUMBER

RECORD OF REVISIONS

No.	DATE	DESCRIPTION

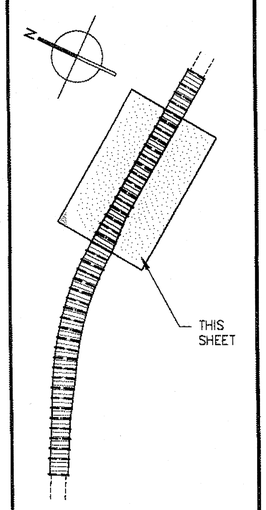

PLAN LEGEND

CHECKED BY: CMG

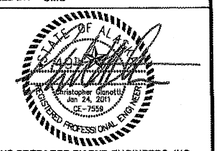

PLANS PREPARED BY PND ENGINEERS, INC.

DESIGNED BY: MDS

DRAWN BY: PJD

STATE OF ALASKA
DEPARTMENT OF TRANSPORTATION & PUBLIC FACILITIES
SOUTHEAST REGION

JUNEAU BRIDGE REPAIR & UPGRADE
BASIN ROAD TRESTLE BRIDGE NO.948

DEMOLITION PLANS

PROJECT DESIGNATION	
68979/BR-0003(144)	
STATE	YEAR
ALASKA	2010
SHEET NUMBER	TOTAL SHEETS
N2.3	58

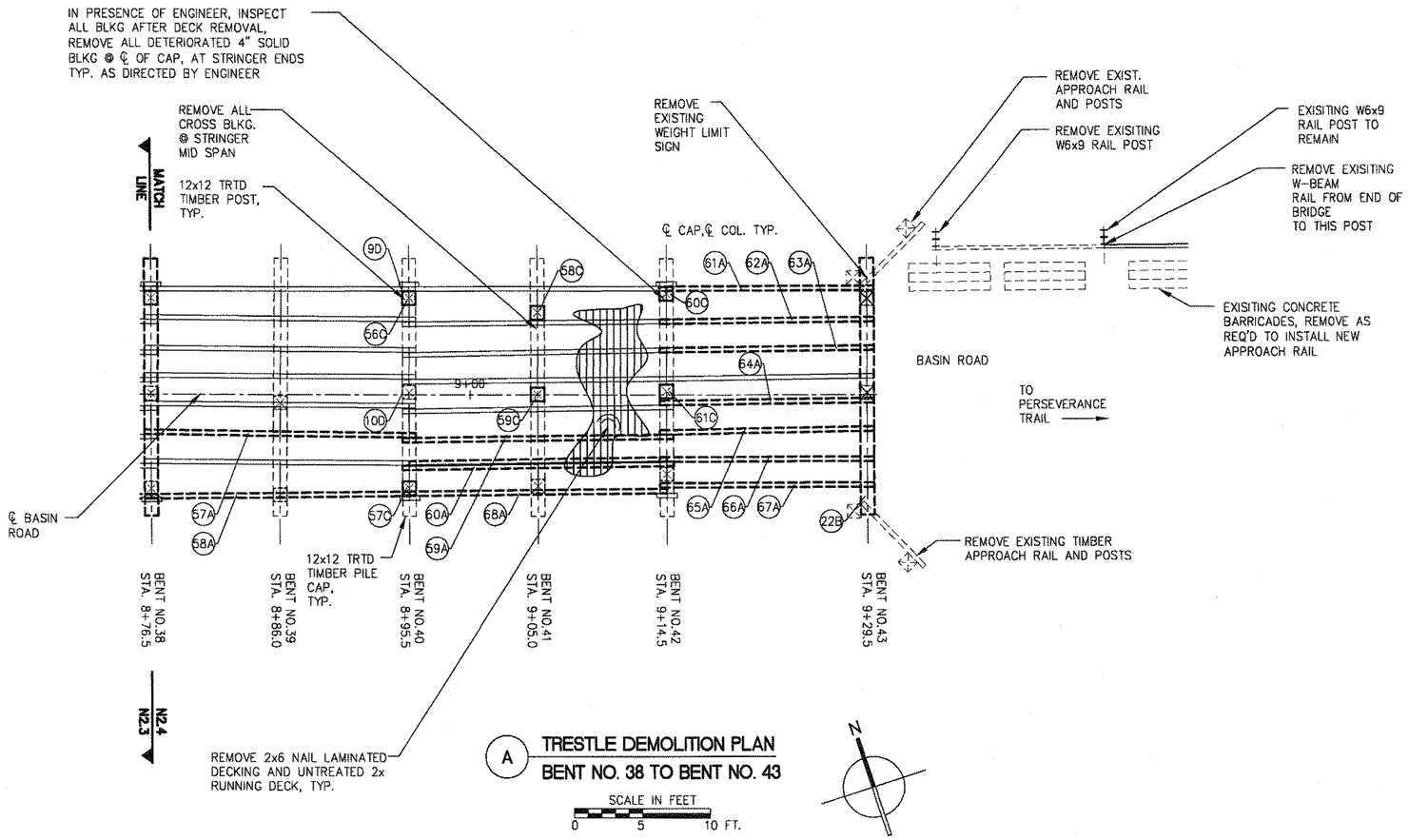

A TRESTLE DEMOLITION PLAN
BENT NO. 38 TO BENT NO. 43

SCALE IN FEET
0 5 10 FT.

NOTES:

1. REMOVE ALL RAILS (RAILS NOT SHOWN).
2. (#) INDICATES REPLACE OR REPAIR MEMBERS PER TABLES ON SHEETS N2.5 & N2.6.
3. ==== INDICATES REPAIR OR REPLACE MEMBERS.
4. ═══ INDICATES EXISTING MEMBER TO REMAIN.
5. - - - - - INDICATES EXISTING MEMBER BELOW TO REMAIN.
6. IN PRESENCE OF ENGINEER, FIELD INSPECT ALL FRAMING TO REMAIN.
7. REMOVE ALL EXISTING OBSTRUCTION MARKERS AND BRIDGE WEIGHT LIMIT SIGNS. SALVAGE MATERIALS TO BE RE-USED.

JSK
32/83

DO NOT SCALE FROM THESE DRAWINGS USE DIMENSIONS

PATH:N:\09XXX\092025 BASIN ROAD TRESTLE\D-DRAWINGS\PND\FINAL DESIGN\DEMO_DECK_RAIL PLAN.DWG
KATHERINE LUNDQUIST
TAB: N2.4 Monday, January 24, 2011 3:25:24 PM

ADDENDUM NUMBER
ATTACHMENT NUMBER

RECORD OF REVISIONS

No.	DATE	DESCRIPTION

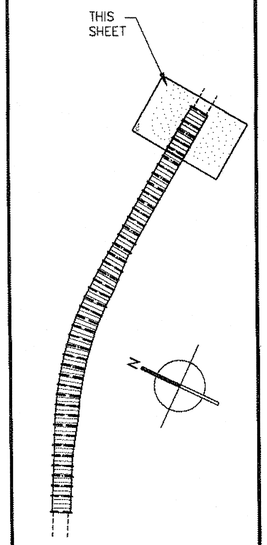

PLAN LEGEND

CHECKED BY: CMG

STATE OF ALASKA
Christopher Gerrott
Jan 24, 2011
CE-7559
REGISTERED PROFESSIONAL ENGINEER

PLANS PREPARED BY PND ENGINEERS, INC.

DESIGNED BY: MDS

DRAWN BY: PJD

STATE OF ALASKA
DEPARTMENT OF TRANSPORTATION & PUBLIC FACILITIES
SOUTHEAST REGION

JUNEAU BRIDGE REPAIR & UPGRADE
BASIN ROAD TRESTLE BRIDGE NO.948

DEMOLITION PLANS

PROJECT DESIGNATION	
68979/BR-0003(144)	
STATE	YEAR
ALASKA	2010
SHEET NUMBER	TOTAL SHEETS
N2.4	58

STRINGER REPAIR TABLE

MARK #	LOCATION		ACTION
	BENT	STRINGER	
1A	1 TO 2	A	REPLACE WITH 2 STRINGERS
2A		B	REPLACE WITH 2 STRINGERS
3A		C	REPLACE WITH 2 STRINGERS
4A		D	REPLACE WITH 2 STRINGERS
5A		E	REPLACE WITH 2 STRINGERS
6A		F	REPLACE WITH 2 STRINGERS
7A		G	REPLACE WITH 2 STRINGERS
8A		H	REPLACE WITH 2 STRINGERS
9A	2 TO 4	A	REPLACE
10A		C	REPLACE
11A		D	REPLACE
12A		E	REPLACE
13A		F	REPLACE
14A		G	REPLACE
15A		H	REPLACE
16A	4 TO 6	F	REPLACE
17A		G	REPLACE
18A		H	REPLACE
19A	8 TO 10	H	REPLACE
20A		K	REPLACE
21A		L	REPLACE
22A	10 TO 12	H	REPLACE
23A		I	REPLACE
24A		K	REPLACE BOTH STRINGERS WITH ONE NEW STRINGER
25A	12 TO 14	G	REPLACE
26A		H	REPLACE
27A		J	REPLACE
28A	14 TO 16	A	TIGHTEN BOLTS
29A		G	REPLACE
30A		J	REPLACE
31A		K	REPLACE
32A	16 TO 18	A	TIGHTEN BOLTS
33A		B	REPLACE
34A		C	REPLACE
35A		D	REPLACE
36A		F	REPLACE
37A		G	REPLACE
38A		H	REPLACE
39A	18 TO 20	B	REPLACE BOTH STRINGERS WITH ONE NEW STRINGER
40A		E	REPLACE BOTH STRINGERS WITH ONE NEW STRINGER
41A		F	REPLACE BOTH STRINGERS WITH ONE NEW STRINGER
42A		H	REPLACE BOTH STRINGERS WITH ONE NEW STRINGER
43A		I	REPLACE BOTH STRINGERS WITH ONE NEW STRINGER
44A		K	REPLACE BOTH STRINGERS WITH ONE NEW STRINGER
45A	24 TO 26	K	REPLACE
46A	26 TO 28	H	REPLACE
47A		I	REPLACE
48A	28 TO 30	E	REPLACE

STRINGER REPAIR TABLE (CONT.)

49A	30 to 32	C	REPLACE
50A		F	REPLACE
51A		G	REPLACE
52A	32 TO 34	D	REPLACE
53A		G	REPLACE
54A		H	REPLACE
55A	34 TO 36	E	REPLACE
56A	36 TO 38	H	REPLACE
57A	38 TO 40	F	REPLACE
58A		H	REPLACE
59A	40 to 42	F	REPLACE
60A		G	REPLACE BOTH STRINGERS WITH ONE NEW STRINGER
61A	42 TO 43	A	REPLACE WITH 2 STRINGERS
62A		B	REPLACE WITH 2 STRINGERS
63A		C	REPLACE WITH 2 STRINGERS
64A		E	REPLACE WITH 2 STRINGERS
65A		F	REPLACE WITH 2 STRINGERS
66A		G	REPLACE WITH 2 STRINGERS
67A		H	REPLACE WITH 2 STRINGERS
68A	40 TO 42	H	REPLACE

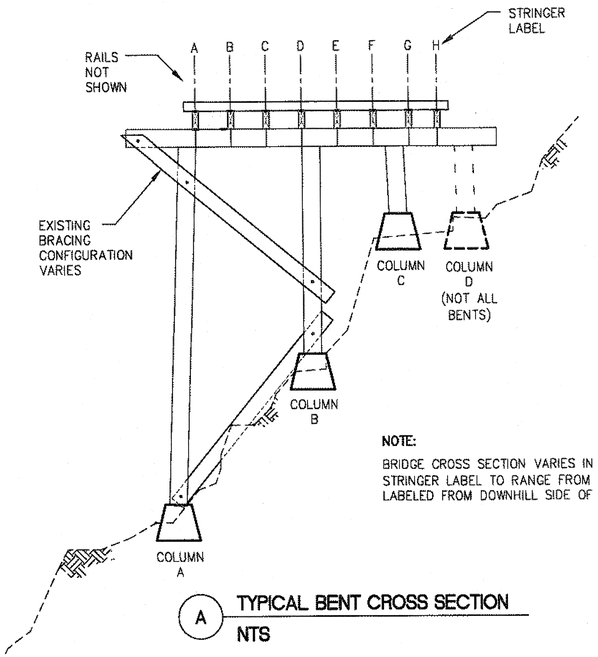

NOTE:
BRIDGE CROSS SECTION VARIES IN WIDTH ALLOWING STRINGER LABEL TO RANGE FROM "A" TO "L", LABELED FROM DOWNHILL SIDE OF BRIDGE.

A TYPICAL BENT CROSS SECTION
NTS

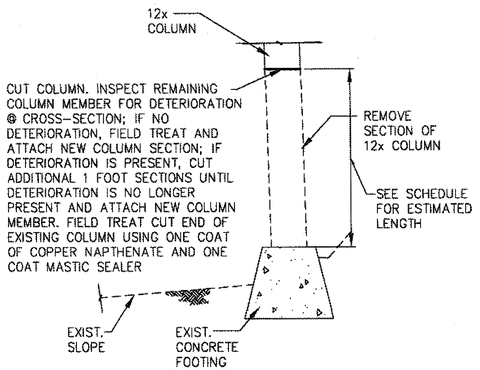

B COLUMN ROTTEN END REPAIR DETAIL
NTS

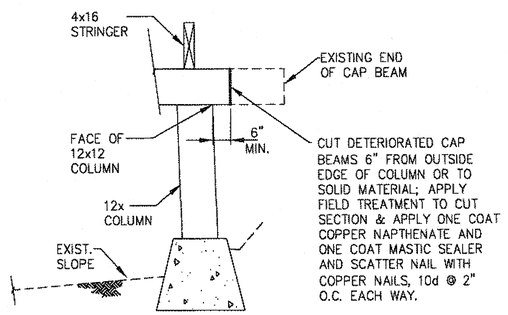

C CAP BEAM ROTTEN END REPAIR DETAIL
NTS

NOTE:
IF CAP BEAM SECTION AT CUT SHOWS SIGNS OF SIGNIFICANT DETERIORATION NOTIFY ENGINEER, AT DIRECTION OF ENGINEER, REMOVE CAP BEAM BACK TO NEXT COLUMN AND EVALUATE CROSS SECTION; AT DIRECTION OF ENGINEER, IF CAP BEAM IS STILL DETERIORATED OVER MIDDLE INTERIOR COLUMN, REMOVE ENTIRE CAP BEAM.

PLANS PREPARED BY
PND ENGINEERS, INC.

JSK 39/83

DO NOT SCALE FROM THESE DRAWINGS USE DIMENSIONS

CHECKED BY: CMG
DESIGNED BY: MDS
DRAWN BY: PJD

STATE OF ALASKA
DEPARTMENT OF TRANSPORTATION & PUBLIC FACILITIES
SOUTHEAST REGION

JUNEAU BRIDGE REPAIR & UPGRADE BASIN ROAD TRESTLE BRIDGE NO.948

DEMOLITION TABLES

PATH: N:\09XXX\092025 BASIN ROAD TRESTLE\D- DRAWINGS\PND\FINAL DESIGN\DEMO_DECK_RAIL PLAN.DWG
TAB: N2.5 Monday, January 24, 2011 3:25:34 PM KATHERINE LUNDQUIST

REVISIONS			PROJECT DESIGNATION	YEAR	SHEET NO.	TOTAL SHEETS
NO.	DATE	DESCRIPTION	68979/BR-0003(144)	2010	N2.5	58

CAP BEAM REPAIR TABLE

MARK #	LOCATION	ACTION
	BENT	
1B	1	REPLACE
2B	2	REPLACE
3B	4	REPLACE
4B	6	REPLACE
5B	7	REPLACE
6B	8	REPLACE
7B	10	REPLACE
8B	11	REPLACE
9B	14	REPLACE
10B	16	REPLACE
11B	18	REPLACE
12B	20	REPLACE
13B	24	REPLACE
14B	26	REPLACE
15B	28	REPLACE
16B	30	REPLACE
17B	33	REPLACE
18B	34	REPLACE
19B	35	REPLACE
20B	36	REPLACE
21B	38	REPLACE
22B	43	REPLACE

COLUMN REPAIR TABLE

MARK #	LOCATION		ACTION
	BENT	COLUMN	
1C	1	A	REPLACE
2C	2	A	REPLACE
3C		B	REPLACE
4C	3	A	REPLACE
5C		B	REPLACE
6C	4	B	REPLACE
7C		C	REPLACE
8C	5	B	REPLACE
9C		C	REPLACE
10C	6	A	REMOVE BOTTOM 5' OF COLUMN
11C		C	REPLACE
12C	7	C	REPLACE
13C	8	D	REPLACE
14C	9	C	REPLACE
15C	10	A	REMOVE BOTTOM 5' OF COLUMN
16C	11	B	REPLACE
17C		C	REPLACE
18C	12	A	REPLACE
19C		B	REPLACE
20C	13	B	REPLACE
21C	14	A	REPLACE
22C		B	REPLACE
23C		C	REPLACE
24C	15	B	REPLACE
25C	16	A	REPLACE
26C		B	REPLACE
27C	17	B	REPLACE
28C	19	B	REPLACE
29C	20	A	REPLACE
30C		B	REPLACE
31C	21	B	REPLACE
32C	23	B	REPLACE
33C	24	A	REPLACE

COLUMN REPAIR TABLE (CONT.)

37C	26	A	REMOVE BOTTOM 5' OF COLUMN
38C		B	REPLACE
39C		D	REPLACE
40C	27	A	REMOVE BOTTOM 5' OF COLUMN
41C	28	A	REMOVE BOTTOM 5' OF COLUMN
42C	29	A	REMOVE BOTTOM 5' OF COLUMN
43C		B	REPLACE
44C	30	A	REMOVE BOTTOM 5' OF COLUMN
45C		B	REPLACE
46C	31	B	REPLACE
47C	32	A	REMOVE BOTTOM 5' OF COLUMN
48C	33	B	REPLACE
49C	34	B	REPLACE
50C		C	REPLACE
51C	35	B	REPLACE
52C		C	REPLACE
53C	36	A	REMOVE BOTTOM 5' OF COLUMN
54C		C	REPLACE
55C	38	A	REMOVE BOTTOM 5' OF COLUMN
56C	40	A	REMOVE BOTTOM 5' OF COLUMN
57C		C	REPLACE
58C	41	A	REMOVE BOTTOM 5' OF COLUMN
59C		B	REPLACE
60C	42	A	REPLACE
61C		B	REPLACE

FOOTING REPAIR TABLE

MARK #	LOCATION		ACTION
	BENT	FOOTINGS	
1D	9	A	EXCAVATE AND EVALUATE IN FIELD
2D		B	EXCAVATE AND EVALUATE IN FIELD
3D	10	A	REPAIR CONCRETE SPALLING
4D		C	EXCAVATE AND EVALUATE IN FIELD
5D	27	A	REPAIR EROSION AT TOE OF FOOTING
6D	32	A	REPAIR EROSION AT TOE OF FOOTING
7D	36	B	REPAIR CONCRETE SPALLING
8D	38	B	REPAIR EROSION AT TOE OF FOOTING
9D	40	A	EXCAVATE AND EVALUATE IN FIELD
10D		B	REPAIR

NOTES:

1. IF FOOTING SHOWS SIGNS OF EROSION OR SPALLING, SEE DETAIL D/N3.4 OR E/N3.4
2. FOR FOOTINGS REQUIRING EXCAVATION, SEE DETAILS A OR C/N3.4

DO NOT SCALE FROM THESE DRAWINGS USE DIMENSIONS

JSK 4/8/83

PLANS PREPARED BY
PND ENGINEERS, INC.

CHECKED BY: CMG

STATE OF ALASKA
Christopher Gianotti
Jan 24, 2011
CE-7559
REGISTERED PROFESSIONAL ENGINEER

DESIGNED BY: MDS
DRAWN BY: PJD

STATE OF ALASKA
DEPARTMENT OF TRANSPORTATION
& PUBLIC FACILITIES
SOUTHEAST REGION

JUNEAU BRIDGE REPAIR
& UPGRADE
BASIN ROAD TRESTLE BRIDGE
NO.948

DEMOLITION TABLES

PATH: N:\09XXX\092025 BASIN ROAD TRESTLE\D- DRAWINGS\PND\FINAL DESIGN\DEMO_DECK_RAIL PLAN.DWG
TAB: N2.6 Monday, January 24, 2011 3:25:43 PM KATHERINE LUNDQUIST

REVISIONS			PROJECT DESIGNATION	YEAR	SHEET NO.	TOTAL SHEETS
NO.	DATE	DESCRIPTION	68979/BR-0003(144)	2010	N2.6	58

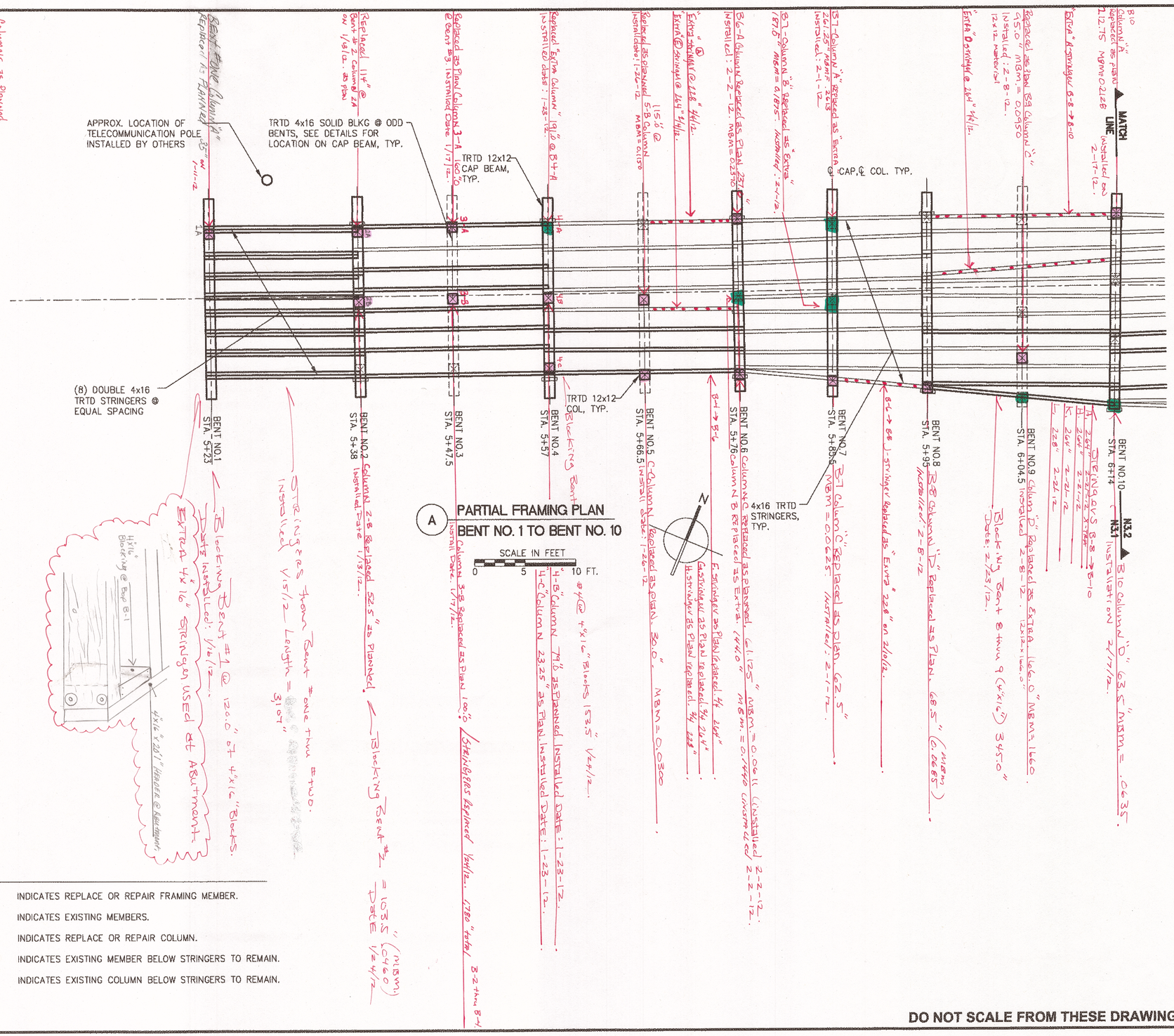

NOTES:

1. ═══ INDICATES REPLACE OR REPAIR FRAMING MEMBER.
2. ═══ INDICATES EXISTING MEMBERS.
3. ☒ INDICATES REPLACE OR REPAIR COLUMN.
4. - - - INDICATES EXISTING MEMBER BELOW STRINGERS TO REMAIN.
5. ☒ INDICATES EXISTING COLUMN BELOW STRINGERS TO REMAIN.

DO NOT SCALE FROM THESE DRAWINGS USE DIMENSIONS

JSK 4/83

PATH:N:\09XXX\092025 BASIN ROAD TRESTLE\D-DRAWINGS\PND\FINAL DESIGN\DEMO_DECK_RAIL PLAN.DWG
KATHERINE LUNDQUIST
TAB: N3.1 Monday, January 24, 2011 3:25:54 PM

ADDENDUM NUMBER
ATTACHMENT NUMBER

RECORD OF REVISIONS

No.	DATE	DESCRIPTION

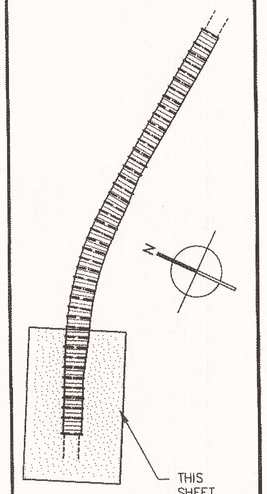

PLAN LEGEND

CHECKED BY: CMG

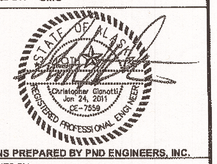

PLANS PREPARED BY PND ENGINEERS, INC.

DESIGNED BY: MDS

DRAWN BY: PJD

STATE OF ALASKA
DEPARTMENT OF TRANSPORTATION & PUBLIC FACILITIES
SOUTHEAST REGION

JUNEAU BRIDGE REPAIR & UPGRADE
BASIN ROAD TRESTLE BRIDGE NO.948

PARTIAL FRAMING PLAN

PROJECT DESIGNATION	
68979/BR-0003(144)	
STATE	YEAR
ALASKA	2010
SHEET NUMBER	TOTAL SHEETS
N3.1	58

"Extra" Stringers as Built

Columns as Planned
"Extra" Columns
OR

TIMBER CAP BEAMS

TRTD 4x16 SOLID BLKG @ ODD BENTS, SEE DETAILS FOR LOCATION ON CAP BEAM, TYP.

℄ BASIN ROAD

MATCH LINE

℄ CAP, ℄ COL. TYP.

Bents 16-18 Stringers A, B, C, D F, G, H, K, L 22'-7.5" MBM 10'-0"

TRTD 12x12 CAP BEAM, TYP.

TRTD 12x12 COL. TYP.

4x16 TRTD STRINGERS, TYP.

Bent #18 Column #5 Replaced 12/21/11.

Bent #19 Column #4 & Extra Installed 12/21/11. Bent #21 Column #4 Replaced 12/21/11.

Bent #23 Column #4 Replaced 12/21/11.

Bent #24 Column #4 3-29-12. Replaced.

MATCH LINE

Column @ B-10 Replaced as Plan 2-28-12.

Replaced as Plan 23'-0" MBM = .2310 2-28-12. Installed: 2-28-12.

Replaced as Plan B-11 Column "A" (0763) RT. 25° (right) Installed: 2-20-12.

Replaced as Plan B-13 Column "A" Length: 17'-0" MBM = .0770 Installed: 3-5-12.

Extra "A" Stringer @ 128° on 3/8/12.

Bent #15 Column "B" 20'-5" (MBM: .0225) Replaced as Plan Installed: 3-5-12.

Replaced as Plan 22'-5" MBM = .1100 Installed: 3/8/12.

No Need to Replace

Timber Cap #12 Replaced 3/20/12.

Timber Cap #13 Remains Undisturbed (Type)

Timber Cap #11 Replaced 2-20-12.

Timber Cap #10 Replaced 3/20/12.

Timber Cap #16 Replaced 3/13/12.

Timber Cap #17 Replaced 3/19/12.

Timber Cap #18-20 Stringers "E", "F", "H", "I" & "K" Replaced 3/16/12.

Timber Cap #20 Replaced 12/21/11.

Bent #20 "J" Stringers "A", "K", "L" Replaced 3/23/12. Blocking Bents Replaced 3/24/12.

Bent #22-24 Stringers "A", "L" Replaced 3/20/12.

Timber Cap Beam #24 Replaced 3/29/12.

BENT NO.10 STA. 6+14

BENT NO.11 STA. 6+23

BENT NO.12 STA. 6+32

BENT NO.13 STA. 6+41.5

BENT NO.14 STA. 6+51

BENT NO.15 STA. 6+60.25

BENT NO.16 STA. 6+69.5

BENT NO.17 STA. 6+78.75

BENT NO.18 STA. 6+88

BENT NO.19 STA. 6+97.25

BENT NO.20 STA. 7+06.5

BENT NO.21 STA. 7+15.75

BENT NO.22 STA. 7+25

BENT NO.23 STA. 7+34.25

BENT NO.24 STA. 7+43.5

N3.1

N3.2

N3.3

Blocking Bents 14-15 = 336'-0" of 4x16 Blocking B-10 thru B-11 = 336.0" Blocking B-12-14 Extra B-12 thru B-13 = 308.0" Blocking Bents 22-23 3/20/12.

Blocking Bents 16-17 3/16/12.

Blocking Bents 18-20 replaced 3/19/12.

Plan: 41'-5" MBM = .0475

Plan: 88'-5" MBM = .0888

Plan: 73.0" MBM = .0730 Date 3/12/12

Plan: 13.0" MBM = .0130 Date 3/12/12

Plan: 27.5" MBM = .0275

Plan: 16'-5.0" MBM = .1650 Date 3/12/12

Plan: 22'-5" MBM = .1100

Plan: 63.5" MBM = .0635

Plan: 17'-0" MBM = .0770

Plan: 23'-0" MBM = .2310

Plan: 22'-5" MBM = .1100

Extra "A" Stringer @ 128° on 3/8/12.

Bent #15 Column "B" 20'-5" (MBM: .0225) Replaced as Plan Installed: 3-5-12.

Replaced as Plan 22'-5" MBM = .1100 Installed: 3/8/12.

Replaced as Plan B-13 Column "A" Length: 17'-0" MBM = .0770 Installed: 3-5-12.

Replaced as Plan 23'-0" MBM = .2310 Installed: 2-28-12.

Replaced as Plan B-11 Column "A" (0763) RT. 25° (right) Installed: 2-20-12.

Column @ B-10 Replaced as Plan 2-28-12.

Timber Cap #10 Replaced 3/20/12.

Timber Cap #11 Replaced 2-20-12.

Timber Cap #12 Replaced 3/20/12.

Timber Cap #13 Remains Undisturbed (Type)

Timber Cap #16 Replaced 3/13/12.

Timber Cap #17 Replaced 3/19/12.

Timber Cap #18-20 Stringers "E", "F", "H", "I" & "K" Replaced 3/16/12.

Timber Cap #20 Replaced 12/21/11.

Bent #20 "J" Stringers "A", "K", "L" Replaced 3/23/12. Blocking Bents Replaced 3/24/12.

Bent #22-24 Stringers "A", "L" Replaced 3/20/12.

Timber Cap Beam #24 Replaced 3/29/12.

Blocking Bents 14-15 = 336'-0" of 4x16

Blocking B-10 thru B-11 = 336.0"

Blocking B-12-14 Extra B-12 thru B-13 = 308.0"

Blocking Bents 22-23 3/20/12.

Blocking Bents 16-17 3/16/12.

Blocking Bents 18-20 replaced 3/19/12.

Plan: 41'-5" MBM = .0475

Plan: 88'-5" MBM = .0888

Plan: 73.0" MBM = .0730 Date 3/12/12

Plan: 13.0" MBM = .0130 Date 3/12/12

Plan: 27.5" MBM = .0275

Plan: 16'-5.0" MBM = .1650 Date 3/12/12

Plan: 22'-5" MBM = .1100

Plan: 63.5" MBM = .0635

Plan: 17'-0" MBM = .0770

Plan: 23'-0" MBM = .2310

Plan: 22'-5" MBM = .1100

"Extra" Columns Installed "Not Planned."

Columns Installed as "Planned."

Timber Cap Beams.

"Extra" Columns Installed "Not Planned."

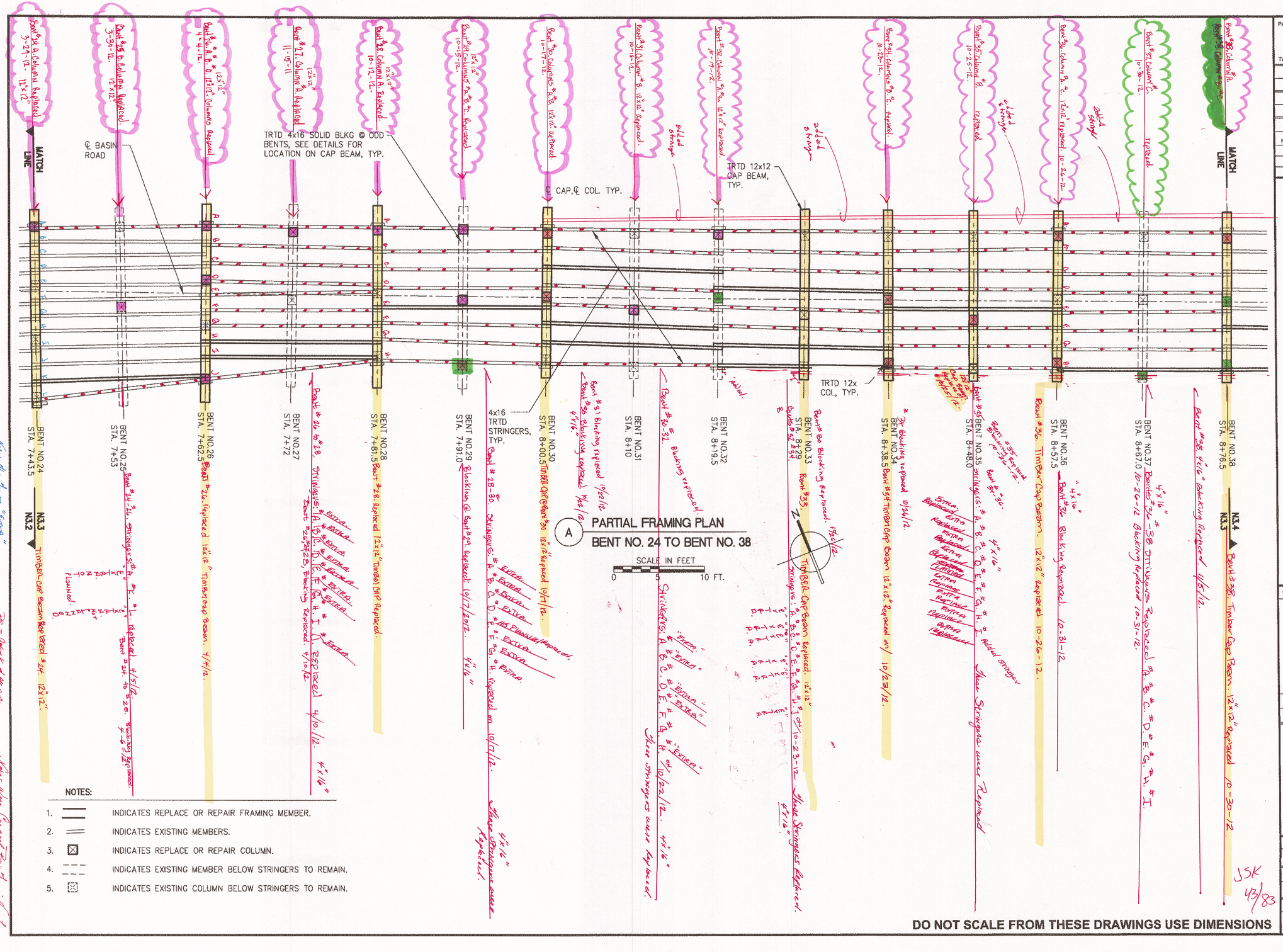

A PARTIAL FRAMING PLAN
BENT NO. 24 TO BENT NO. 38

SCALE IN FEET
0 5 10 FT.

NOTES:

1. ——— INDICATES REPLACE OR REPAIR FRAMING MEMBER.
2. ——— INDICATES EXISTING MEMBERS.
3. ☒ INDICATES REPLACE OR REPAIR COLUMN.
4. - - - INDICATES EXISTING MEMBER BELOW STRINGERS TO REMAIN.
5. ☒ INDICATES EXISTING COLUMN BELOW STRINGERS TO REMAIN.

DO NOT SCALE FROM THESE DRAWINGS USE DIMENSIONS

PATH:N:\09XXX\092025 BASIN ROAD TRESTLE\D-DRAWINGS\PND\FINAL DESIGN\BIND\DEMO_DECK_RAIL PLAN.DWG
KATHERINE LUNDQUIST
TAB: N3.3 Tuesday, January 25, 2011 8:25:37 AM

ADDENDUM NUMBER
ATTACHMENT NUMBER

RECORD OF REVISIONS

No.	DATE	DESCRIPTION

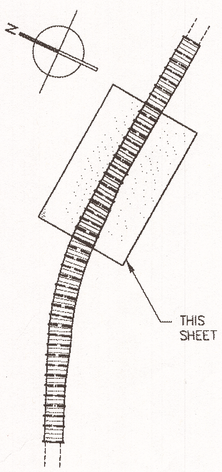

PLAN LEGEND

CHECKED BY: CMG

STATE OF ALASKA
Christopher Gondol
Jan 24, 2011
CE-7559
CERTIFIED PROFESSIONAL ENGINEER

PLANS PREPARED BY PND ENGINEERS, INC.

DESIGNED BY: MDS

DRAWN BY: PJD

STATE OF ALASKA
DEPARTMENT OF TRANSPORTATION & PUBLIC FACILITIES
SOUTHEAST REGION

JUNEAU BRIDGE REPAIR & UPGRADE
BASIN ROAD TRESTLE BRIDGE NO.948

PARTIAL FRAMING PLAN

PROJECT DESIGNATION	
68979/BR-0003(144)	
STATE	YEAR
ALASKA	2010
SHEET NUMBER	TOTAL SHEETS
N3.3	58

JSK 43/83

Note: The drawings "Extra" Columns Installed as Planned" and "Extra" Columns Installed "Not Planned" are a duplicate of the original drawings, that were created in the original drawing set. Information on the "Extra" Columns Installed as Planned" and "Extra" Columns Installed "Not Planned" was added to the original drawings, to clarify the Blocking Requirements for the Contractor.

PE = Point of the end.

Notes Plan Created By: Steve Rau Construction.

Notes Plan Reviewed By: Jeff Lounsbury

Date: 10/17/2012

Additional "Extra Columns Installed"

Timber Caps Beam 12"x12"

Columns Installed 12"x12"

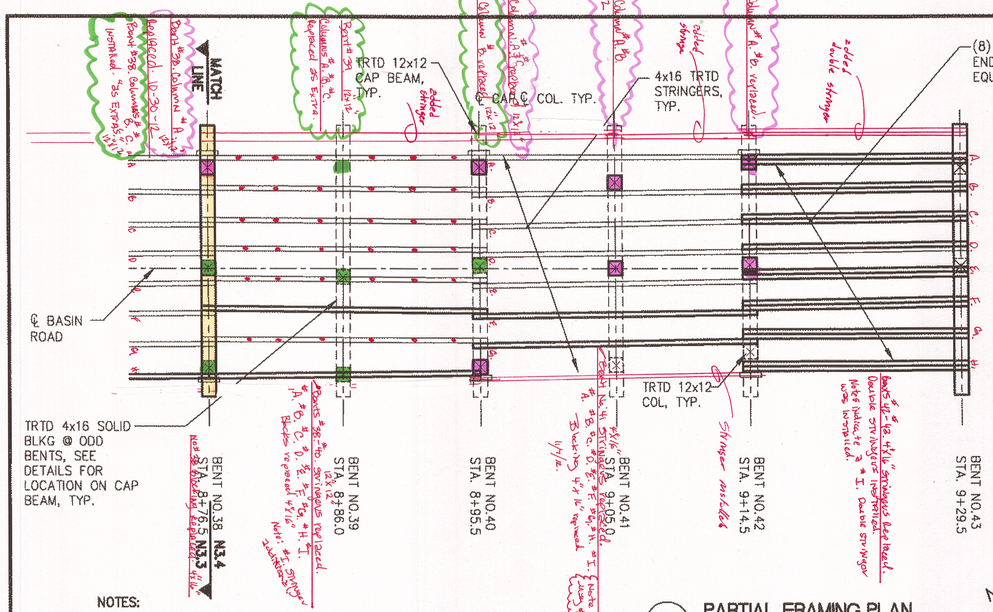

1 PARTIAL FRAMING PLAN
BENT NO. 38 TO BENT NO. 43

SCALE IN FEET
0 5 10 FT.

NOTES:

1. INDICATES REPLACE OR REPAIR FRAMING MEMBER.
2. INDICATES EXISTING MEMBERS.
3. INDICATES REPLACE OR REPAIR COLUMN.
4. INDICATES EXISTING MEMBER BELOW STRINGERS TO REMAIN.
5. INDICATES EXISTING COLUMN BELOW STRINGERS TO REMAIN.

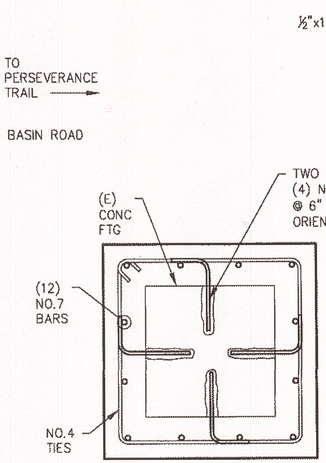

2 TYPICAL DOWEL PLAN

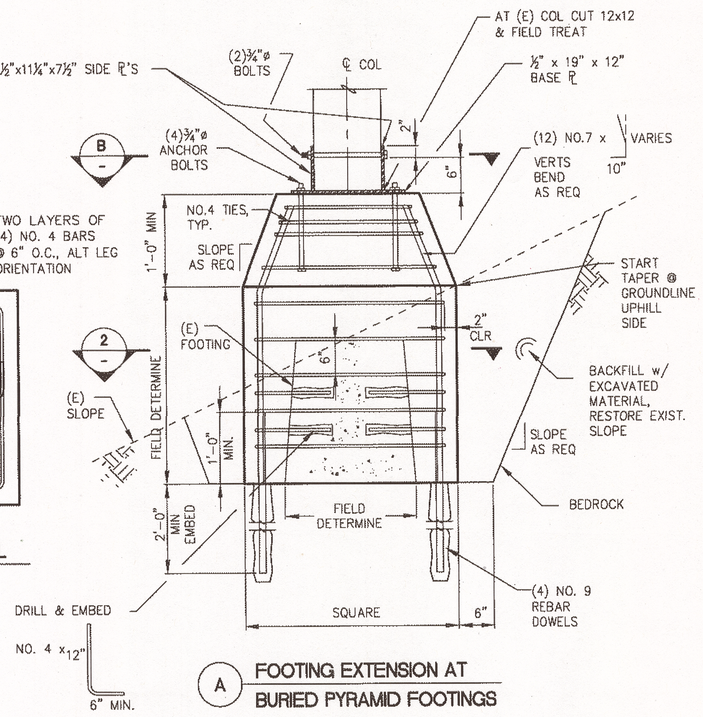

A FOOTING EXTENSION AT BURIED PYRAMID FOOTINGS

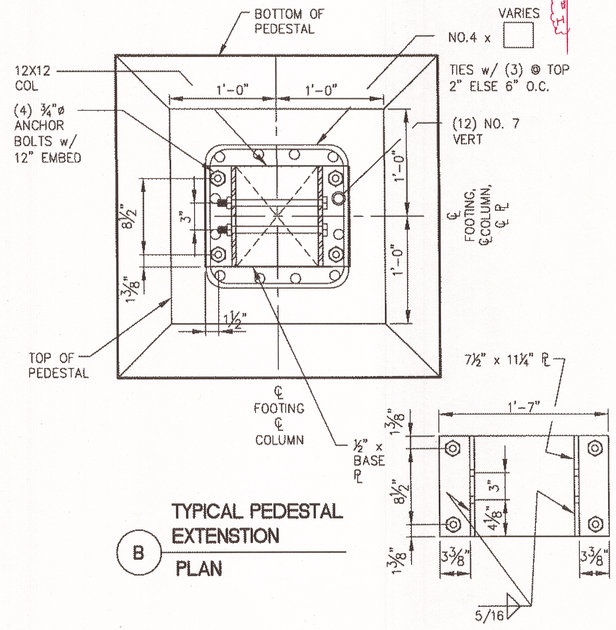

B TYPICAL PEDESTAL EXTENSTION PLAN

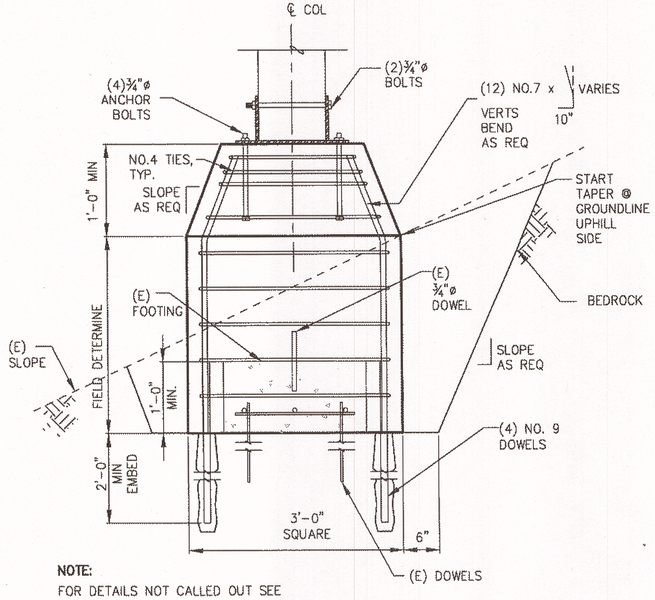

NOTE:
FOR DETAILS NOT CALLED OUT SEE DETAIL B/N3.4

C FOOTING EXTENSIONS AT BURIED SQUARE FOOTINGS

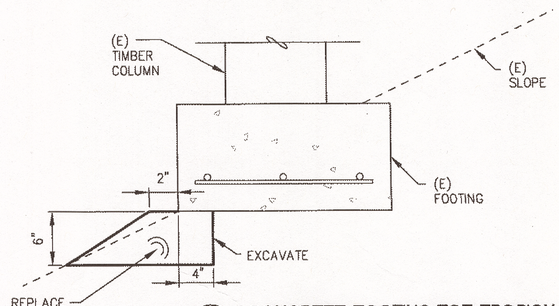

D CONCRETE FOOTING TOE EROSION REPAIR DETAIL

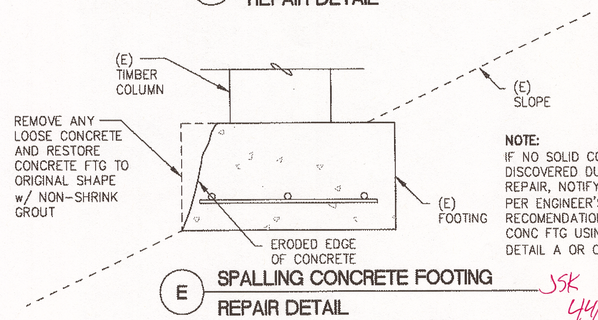

NOTE:
IF NO SOLID CONCRETE IS DISCOVERED DURING REPAIR, NOTIFY ENGINEER PER ENGINEER'S RECOMENDATION, REPAIR CONC FTG USING DETAIL A OR C/N3.4

E SPALLING CONCRETE FOOTING REPAIR DETAIL

DO NOT SCALE FROM THESE DRAWINGS USE DIMENSIONS

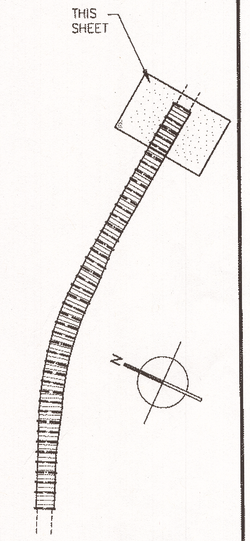

PLAN LEGEND

PATH:N:\09XXX\092025 BASIN ROAD TRESTLE\D-DRAWINGS\PND\FINAL DESIGN\DEMO_DECK_RAIL PLAN.DWG
KATHERINE LUNDQUIST
TAB: N3.4 Monday, January 24, 2011 3:26:24 PM

ADDENDUM NUMBER
ATTACHMENT NUMBER

RECORD OF REVISIONS

No.	DATE	DESCRIPTION

CHECKED BY: CMG

STATE OF ALASKA — CHRISTOPHER M. GIOVANNETTI — 12738 — Jan 24, 2011 — REGISTERED PROFESSIONAL ENGINEER

PLANS PREPARED BY PND ENGINEERS, INC.

DESIGNED BY: MDS

DRAWN BY: PJD

STATE OF ALASKA
DEPARTMENT OF TRANSPORTATION & PUBLIC FACILITIES
SOUTHEAST REGION

JUNEAU BRIDGE REPAIR & UPGRADE
BASIN ROAD TRESTLE BRIDGE NO.948

PARTIAL FRAMING PLAN

PROJECT DESIGNATION
68979/BR-0003(144)

STATE	YEAR
ALASKA	2010
SHEET NUMBER	TOTAL SHEETS
N3.4	58

"Extra Stringers Installed"

Where more Created By: Steve Hartgrove 4th Dec Inspectors.

JSK 44/83

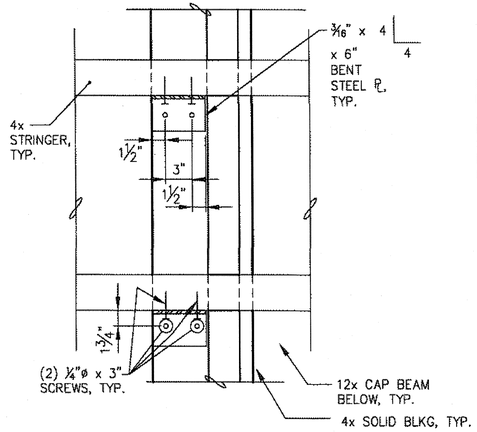

A STRINGER CONNECTION TO CAP BEAM AT CENTER SUPPORT

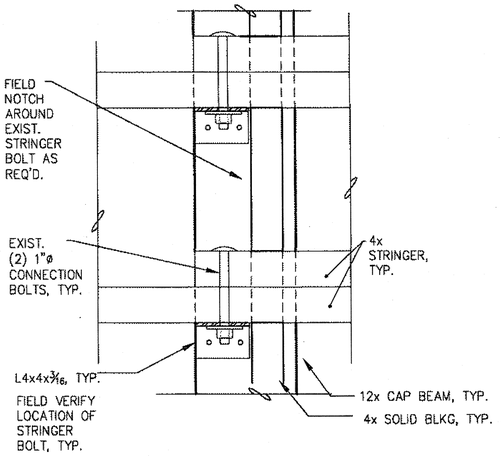

B TYPICAL BLOCKING PLAN

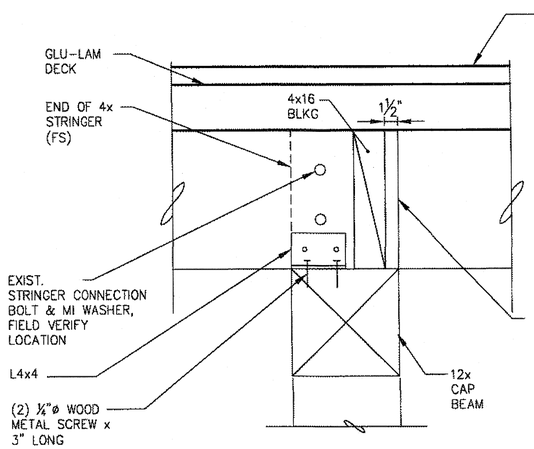

C TYPICAL STRINGER CONNECTION AT CAP BEAM

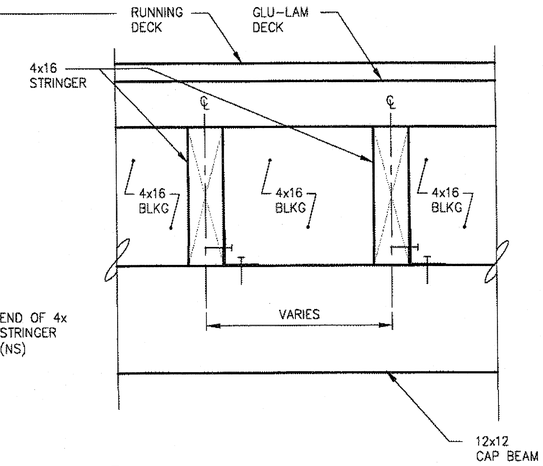

D TYPICAL SOLID BLOCKING OVER INTERMEDIATE CAP BEAMS

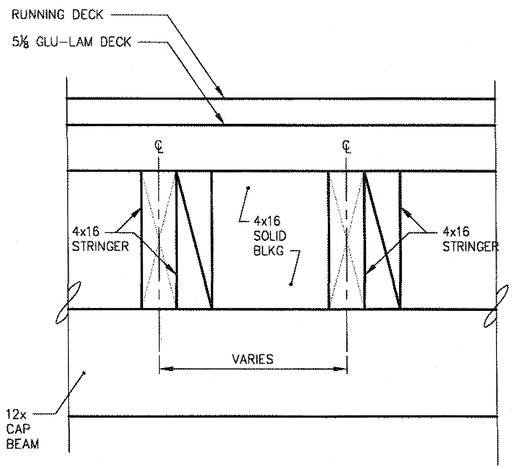

E TYPICAL SOLID BLOCKING STRINGER END SUPPORTS

NOTE:
CONNECTION HARDWARE NOT SHOWN FOR CLARITY.

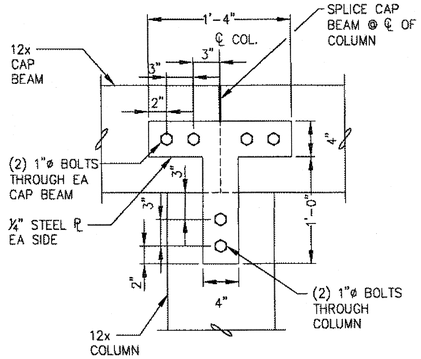

F TYPICAL CAP BEAM SPLICE

NOTE:
1. INSPECT CAP BEAM AFTER CUTTING AND BEFORE NEW CAP BEAM IS SPLICED IN. PER DIRECTION OF ENGINEER, IF REMAINING CAP BEAM SHOWS SIGNS OF ROT THROUGH CROSS SECTION CUT, REPLACE ENTIRE CAP BEAM
2. FIELD TREAT ALL NEW BOLT HOLES WITH ONE COAT COPPER NAPTHENATE AND ONE COAT MASTIC SEALER. FIELD TREAT ALL NEW CUTS TO CAP BEAM.

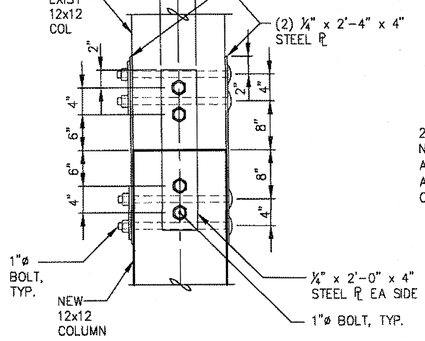

G COLUMN SPLICE DETAIL

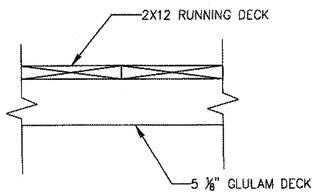

I TYPICAL RUNNING DECK SECTION

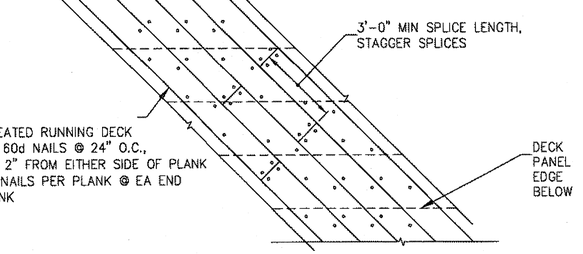

H TYPICAL RUNNING DECK LAYOUT PLAN

NOTES:
1. RAILING AND OTHER STRUCTURAL MEMBERS NOT SHOWN FOR CLARITY.
2. RUNNING DECK MEMBERS ARE PLACED @ 45° ANGLE TO DECK PANEL BELOW.

JSK 4/5/11

DO NOT SCALE FROM THESE DRAWINGS USE DIMENSIONS

PLANS PREPARED BY PND ENGINEERS, INC.

CHECKED BY: CMG
DESIGNED BY: MDS
DRAWN BY: PJD

STATE OF ALASKA
DEPARTMENT OF TRANSPORTATION & PUBLIC FACILITIES
SOUTHEAST REGION

JUNEAU BRIDGE REPAIR & UPGRADE BASIN ROAD TRESTLE BRIDGE NO.948

FRAMING SECTIONS & DETAILS

PATH: N:\09XXX\092025 BASIN ROAD TRESTLE\D- DRAWINGS\PND\FINAL DESIGN\DEMO_DECK_RAIL PLAN.DWG
TAB: N3.5 Monday, January 24, 2011 3:26:34 PM KATHERINE LUNDQUIST

REVISIONS NO.	DATE	DESCRIPTION	PROJECT DESIGNATION	YEAR	SHEET NO.	TOTAL SHEETS
			68979/BR-0003(144)	2010	N3.5	58

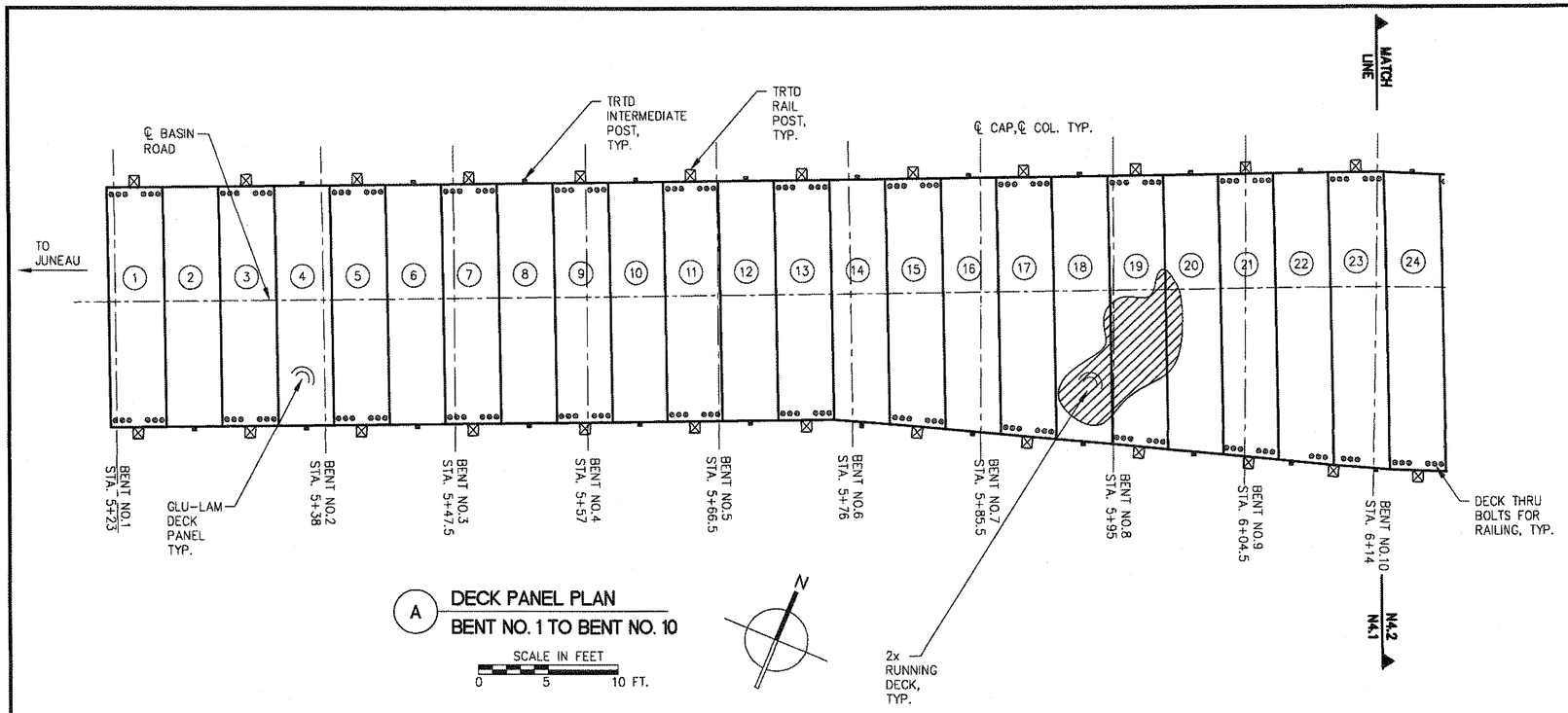

(A) DECK PANEL PLAN
BENT NO. 1 TO BENT NO. 10

NOTES:

1. (X) DENOTES PANEL TYPE, SEE PANEL LAYOUT SHEETS FOR DIMENSIONS.

JSK 46/83

DO NOT SCALE FROM THESE DRAWINGS USE DIMENSIONS

PATH: N:\09XXX\092025 BASIN ROAD TRESTLE\D-DRAWINGS\PND\FINAL DESIGN\DEMO_DECK_RAIL PLAN.DWG

KATHERINE LUNDQUIST

TAB: N4.1 Monday, January 24, 2011 3:26:44 PM

ADDENDUM NUMBER

ATTACHMENT NUMBER

RECORD OF REVISIONS

No.	DATE	DESCRIPTION

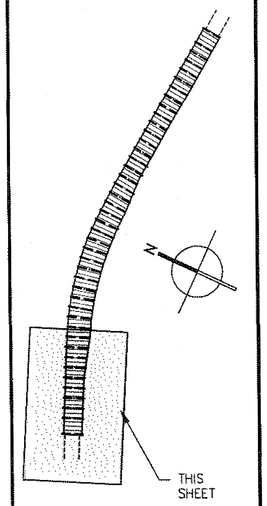

PLAN LEGEND

CHECKED BY: CMG



PLANS PREPARED BY PND ENGINEERS, INC.

DESIGNED BY: MDS

DRAWN BY: PJD

STATE OF ALASKA
DEPARTMENT OF TRANSPORTATION
& PUBLIC FACILITIES
SOUTHEAST REGION

JUNEAU BRIDGE REPAIR & UPGRADE
BASIN ROAD TRESTLE BRIDGE NO.948

DECK PANEL PLANS

PROJECT DESIGNATION
68979/BR-0003(144)

STATE	YEAR
ALASKA	2010

SHEET NUMBER	TOTAL SHEETS
N4.1	58

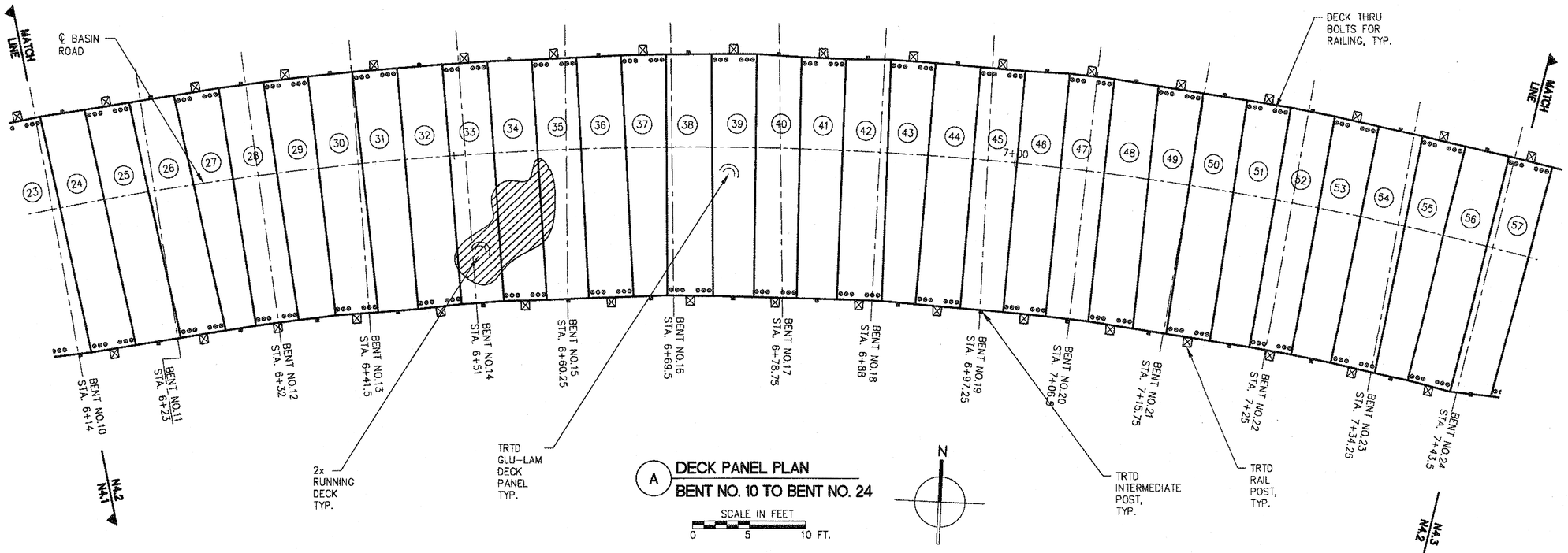

A **DECK PANEL PLAN**
BENT NO. 10 TO BENT NO. 24

SCALE IN FEET
0 5 10 FT.

NOTES:

1. (X) DENOTES PANEL TYPE, SEE PANEL LAYOUT SHEETS FOR DIMENSIONS.

JSK 4/1/83

DO NOT SCALE FROM THESE DRAWINGS USE DIMENSIONS

PATH: N:\09XXX\092025 BASIN ROAD TRESTLE\D-DRAWINGS\PND\FINAL DESIGN\DEMO_DECK_RAIL PLAN.DWG
KATHERINE LUNDQUIST
TAB: N4.2 Monday, January 24, 2011 3:26:54 PM

ADDENDUM NUMBER

ATTACHMENT NUMBER

RECORD OF REVISIONS

No.	DATE	DESCRIPTION

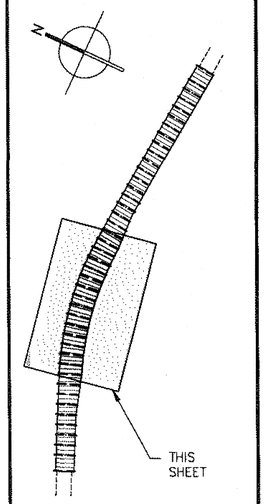

PLAN LEGEND

CHECKED BY: CMG

STATE OF ALASKA
Christopher Gimlott
Jan 24, 2011
CE-7559
REGISTERED PROFESSIONAL ENGINEER

PLANS PREPARED BY PND ENGINEERS, INC.

DESIGNED BY: MDS

DRAWN BY: PJD

STATE OF ALASKA
DEPARTMENT OF TRANSPORTATION
& PUBLIC FACILITIES
SOUTHEAST REGION

JUNEAU BRIDGE REPAIR & UPGRADE
BASIN ROAD TRESTLE BRIDGE NO.948

DECK PANEL PLANS

PROJECT DESIGNATION
68979/BR-0003(144)

STATE	YEAR
ALASKA	2010
SHEET NUMBER	TOTAL SHEETS
N4.2	58

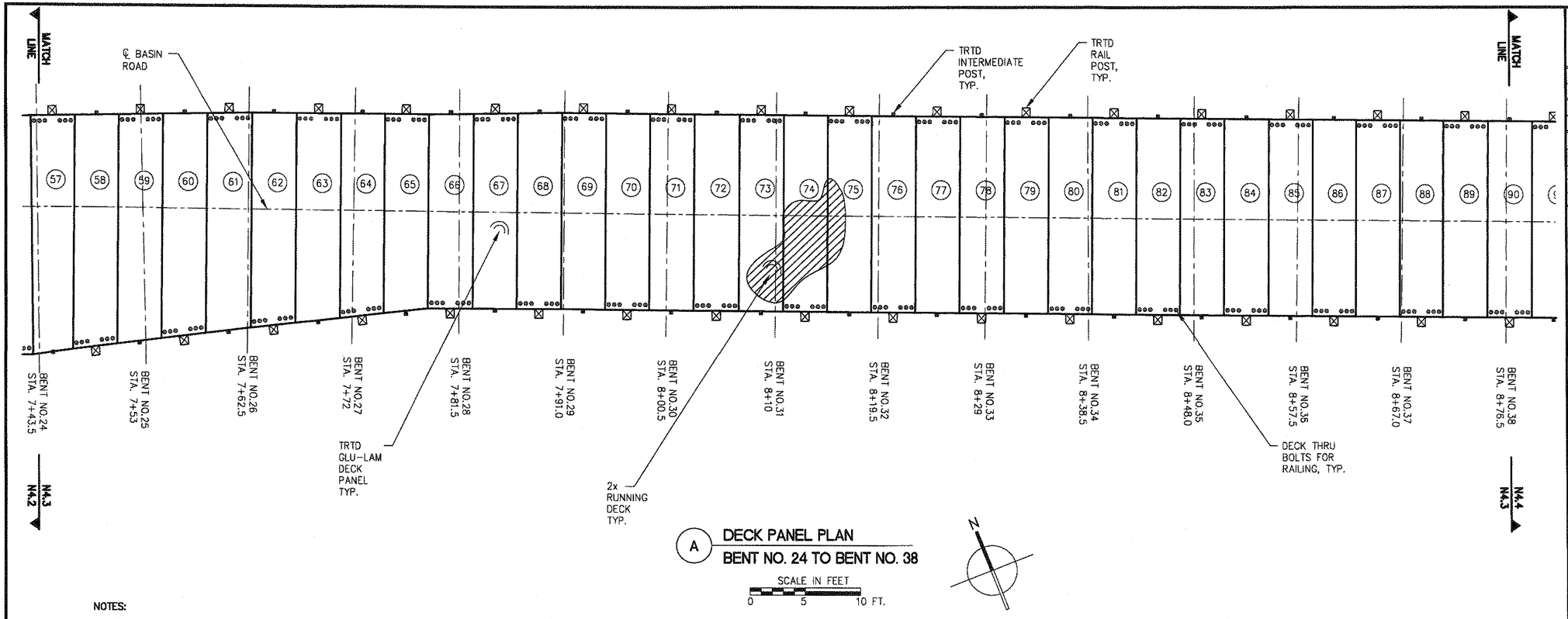

A **DECK PANEL PLAN**
BENT NO. 24 TO BENT NO. 38

SCALE IN FEET
0 5 10 FT.

N

NOTES:

1. (X) DENOTES PANEL TYPE, SEE PANEL LAYOUT SHEETS FOR DIMENSIONS.

JSK 48/83

DO NOT SCALE FROM THESE DRAWINGS USE DIMENSIONS

PATH:N:\09XXX\092025 BASIN ROAD TRESTLE\D-DRAWINGS\PND\FINAL DESIGN\DEMO_DECK_RAIL PLAN.DWG
KATHERINE LUNDQUIST
TAB: N4.3 Monday, January 24, 2011 3:27:04 PM

ADDENDUM NUMBER
ATTACHMENT NUMBER

RECORD OF REVISIONS

No.	DATE	DESCRIPTION

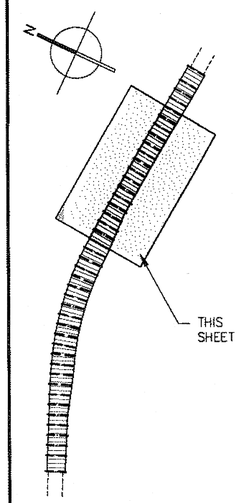

PLAN LEGEND

CHECKED BY: CMG

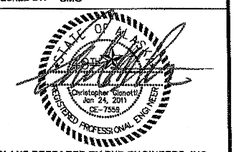

PLANS PREPARED BY PND ENGINEERS, INC.

DESIGNED BY: MDS

DRAWN BY: PJD

STATE OF ALASKA
DEPARTMENT OF TRANSPORTATION
& PUBLIC FACILITIES
SOUTHEAST REGION

JUNEAU BRIDGE REPAIR & UPGRADE
BASIN ROAD TRESTLE BRIDGE NO.948

DECK PANEL PLANS

PROJECT DESIGNATION	
68979/BR-0003(144)	
STATE	YEAR
ALASKA	2010
SHEET NUMBER	TOTAL SHEETS
N4.3	58

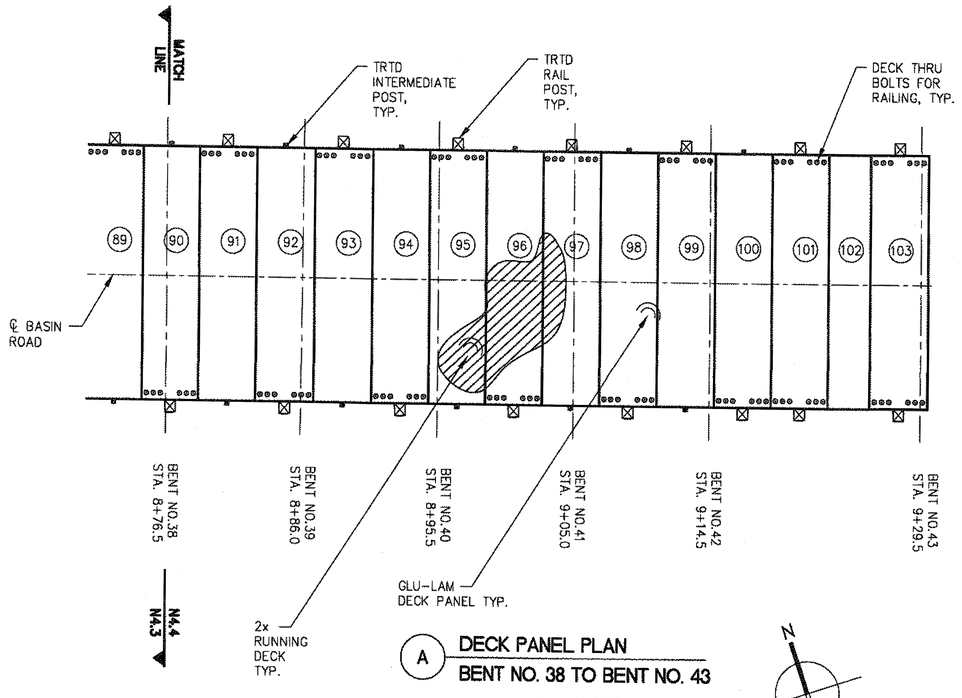

A DECK PANEL PLAN
BENT NO. 38 TO BENT NO. 43

SCALE IN FEET
0 5 10 FT.

BASIN ROAD TO PERSEVERANCE TRAIL →

NOTE: Deck panels between bents No. 30 through 43 were not centered on ℄ Basin Road Per Plan. Additional row of stringers installed on downhill side of trestle to correct overhang due to alignment shift deck panels.

NOTES:

1. (X) DENOTES PANEL TYPE, SEE PANEL LAYOUT SHEETS FOR DIMENSIONS.

JSK 49/83

DO NOT SCALE FROM THESE DRAWINGS USE DIMENSIONS

PATH: N:\09XXX\092025 BASIN ROAD TRESTLE\D-DRAWINGS\PND\FINAL DESIGN\DEMO_DECK_RAIL PLAN.DWG
KATHERINE LUNDQUIST
TAB: N4.4 Monday, January 24, 2011 3:27:14 PM

ADDENDUM NUMBER

ATTACHMENT NUMBER

RECORD OF REVISIONS

No.	DATE	DESCRIPTION

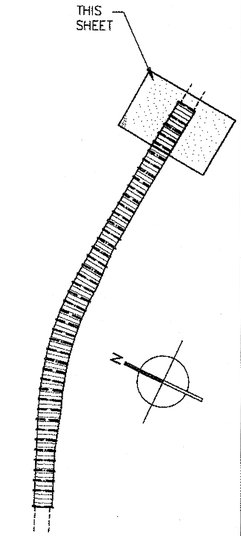

PLAN LEGEND

CHECKED BY: CMG

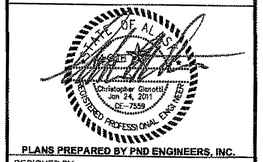

PLANS PREPARED BY PND ENGINEERS, INC.

DESIGNED BY: MDS

DRAWN BY: PJD

STATE OF ALASKA
DEPARTMENT OF TRANSPORTATION & PUBLIC FACILITIES
SOUTHEAST REGION

JUNEAU BRIDGE REPAIR & UPGRADE
BASIN ROAD TRESTLE BRIDGE NO.948

DECK PANEL PLANS

PROJECT DESIGNATION	
68979/BR-0003(144)	
STATE	YEAR
ALASKA	2010
SHEET NUMBER	TOTAL SHEETS
N4.4	58

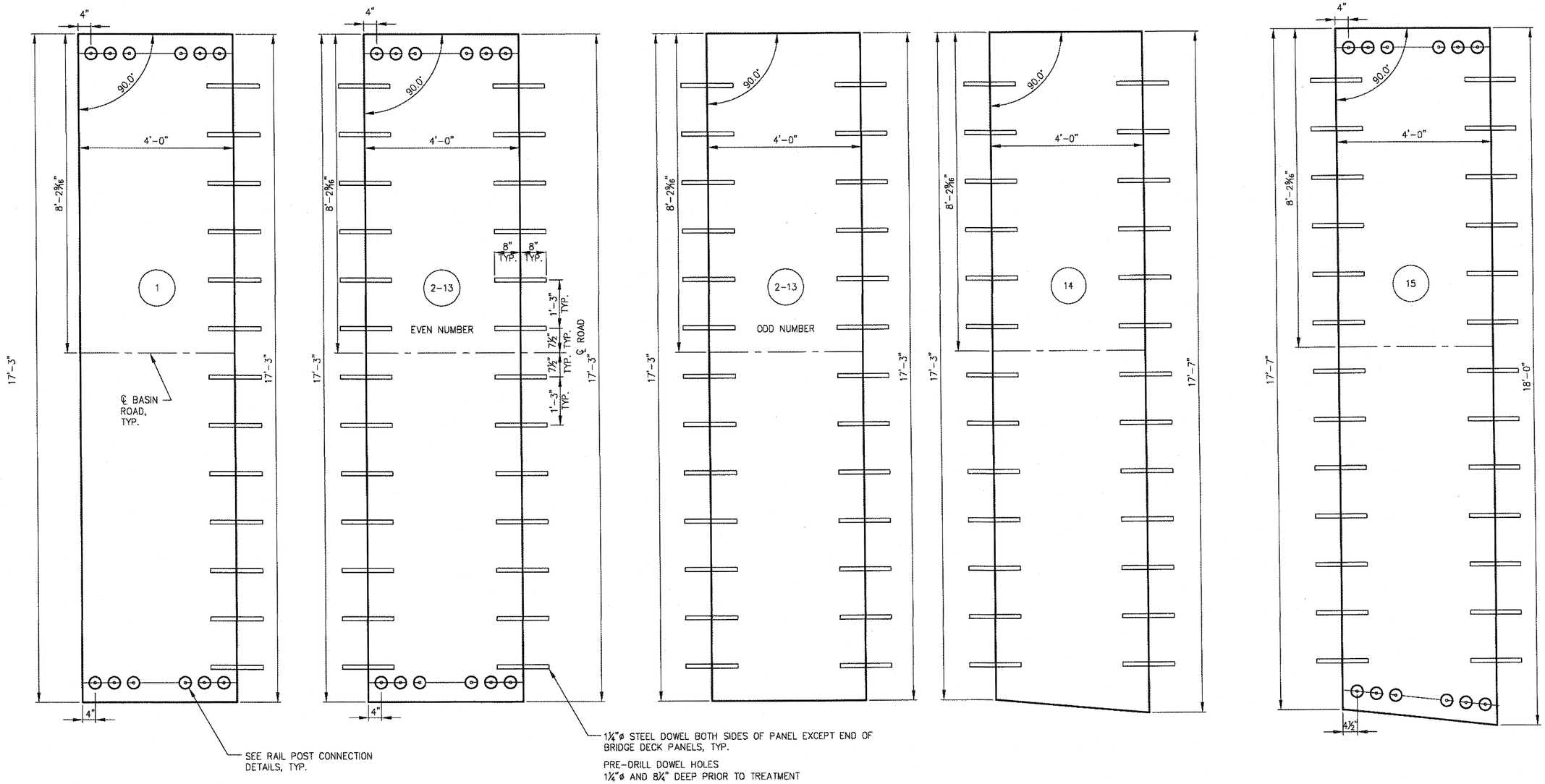

A DECK PANEL LAYOUT

NOTE:
PRE-DRILL RAILING CONNECTION HOLES AND FOR SHEAR PLATES PRIOR TO TREATMENT.

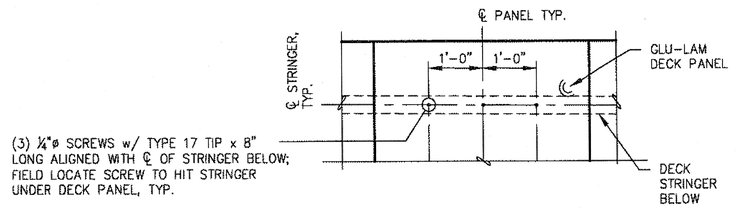

B DECK PANEL SCREW SPACING DETAIL

SCALE IN FEET
0 1 2 3

DO NOT SCALE FROM THESE DRAWINGS USE DIMENSIONS

JSK 5/9/83

PLANS PREPARED BY PND ENGINEERS, INC.

CHECKED BY: CMG
DESIGNED BY: MDS
DRAWN BY: PJD

STATE OF ALASKA
DEPARTMENT OF TRANSPORTATION & PUBLIC FACILITIES
SOUTHEAST REGION

JUNEAU BRIDGE REPAIR & UPGRADE BASIN ROAD TRESTLE BRIDGE NO.948
DECK PANEL LAYOUT

PATH: N:\09XXX\092025 BASIN ROAD TRESTLE\D- DRAWINGS\PND\FINAL DESIGN\N4.1.DWG
TAB: N4.5 Monday, January 24, 2011 3:30:40 PM KATHERINE LUNDQUIST

REVISIONS NO.	DATE	DESCRIPTION	PROJECT DESIGNATION	YEAR	SHEET NO.	TOTAL SHEETS
			68979/BR-0003(144)	2010	N4.5	58

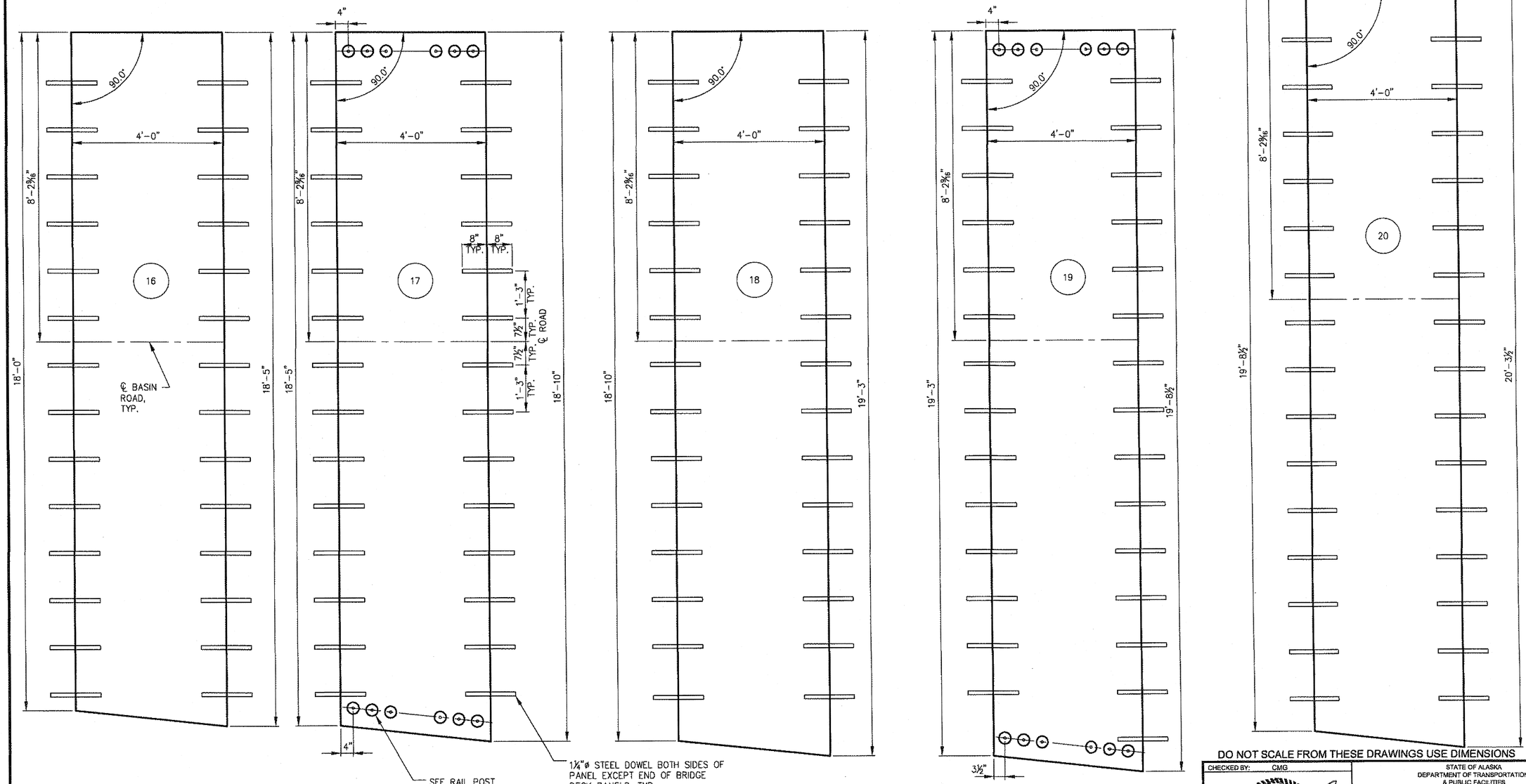

A DECK PANEL LAYOUT

SCALE IN FEET
0 1 2 3

NOTE:

PRE-DRILL RAILING CONNECTION HOLES AND FOR SHEAR PLATES PRIOR TO TREATMENT.

JSK 51/83

PLANS PREPARED BY PND ENGINEERS, INC.

DO NOT SCALE FROM THESE DRAWINGS USE DIMENSIONS

CHECKED BY: CMG

STATE OF ALASKA
Christopher Gianotti
Jan 24, 2011
CE-7559
REGISTERED PROFESSIONAL ENGINEER

DESIGNED BY: MDS
DRAWN BY: PJD

STATE OF ALASKA
DEPARTMENT OF TRANSPORTATION & PUBLIC FACILITIES
SOUTHEAST REGION

JUNEAU BRIDGE REPAIR & UPGRADE
BASIN ROAD TRESTLE BRIDGE NO.948
DECK PANEL LAYOUT

PATH: N:\09XXX\092025 BASIN ROAD TRESTLE\D- DRAWINGS\PND\FINAL DESIGN\N4.1.DWG
TAB: N4.6 Monday, January 24, 2011 3:30:48 PM KATHERINE LUNDQUIST

REVISIONS NO.	DATE	DESCRIPTION	PROJECT DESIGNATION	YEAR	SHEET NO.	TOTAL SHEETS
			68979/BR-0003(144)	2010	N4.6	58

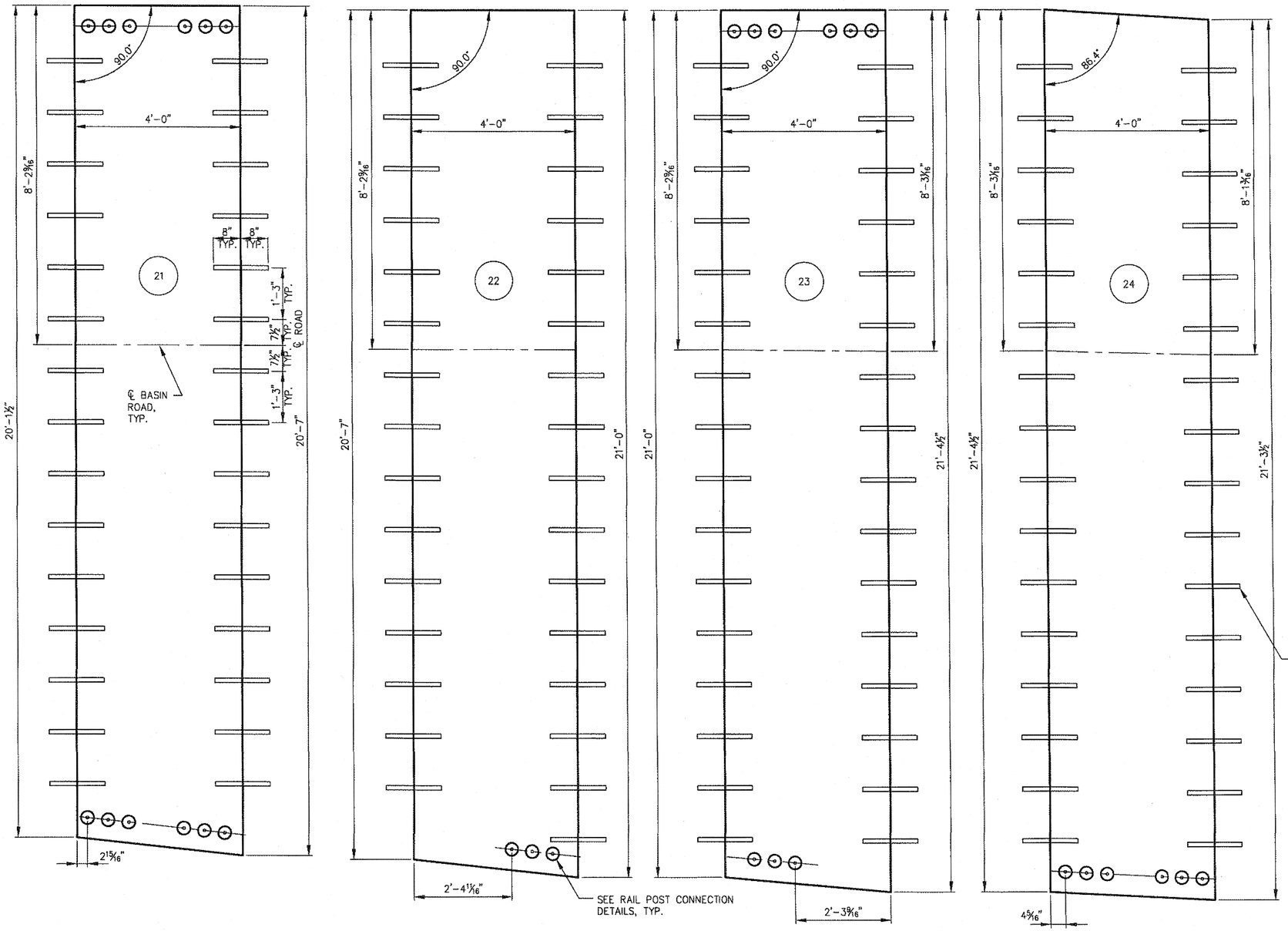

(A) DECK PANEL LAYOUT

NOTE:
PRE-DRILL RAILING CONNECTION HOLES AND FOR SHEAR PLATES PRIOR TO TREATMENT.

SCALE IN FEET
0 1 2 3

JSK 52/83

PLANS PREPARED BY
PND ENGINEERS, INC.

DO NOT SCALE FROM THESE DRAWINGS USE DIMENSIONS

CHECKED BY: CMG
DESIGNED BY: MDS
DRAWN BY: PJD

STATE OF ALASKA
Christopher Gianotti Jan 24, 2011 CE-7559 REGISTERED PROFESSIONAL ENGINEER

DEPARTMENT OF TRANSPORTATION & PUBLIC FACILITIES
SOUTHEAST REGION

JUNEAU BRIDGE REPAIR & UPGRADE BASIN ROAD TRESTLE BRIDGE NO.948

DECK PANEL LAYOUT

PATH: N:\09XXX\092025 BASIN ROAD TRESTLE\D- DRAWINGS\PND\FINAL DESIGN\N4.1.DWG
TAB: N4.7 Monday, January 24, 2011 3:30:58 PM KATHERINE LUNDQUIST

REVISIONS NO.	DATE	DESCRIPTION

PROJECT DESIGNATION	YEAR	SHEET NO.	TOTAL SHEETS
68979/BR-0003(144)	2010	N4.7	58

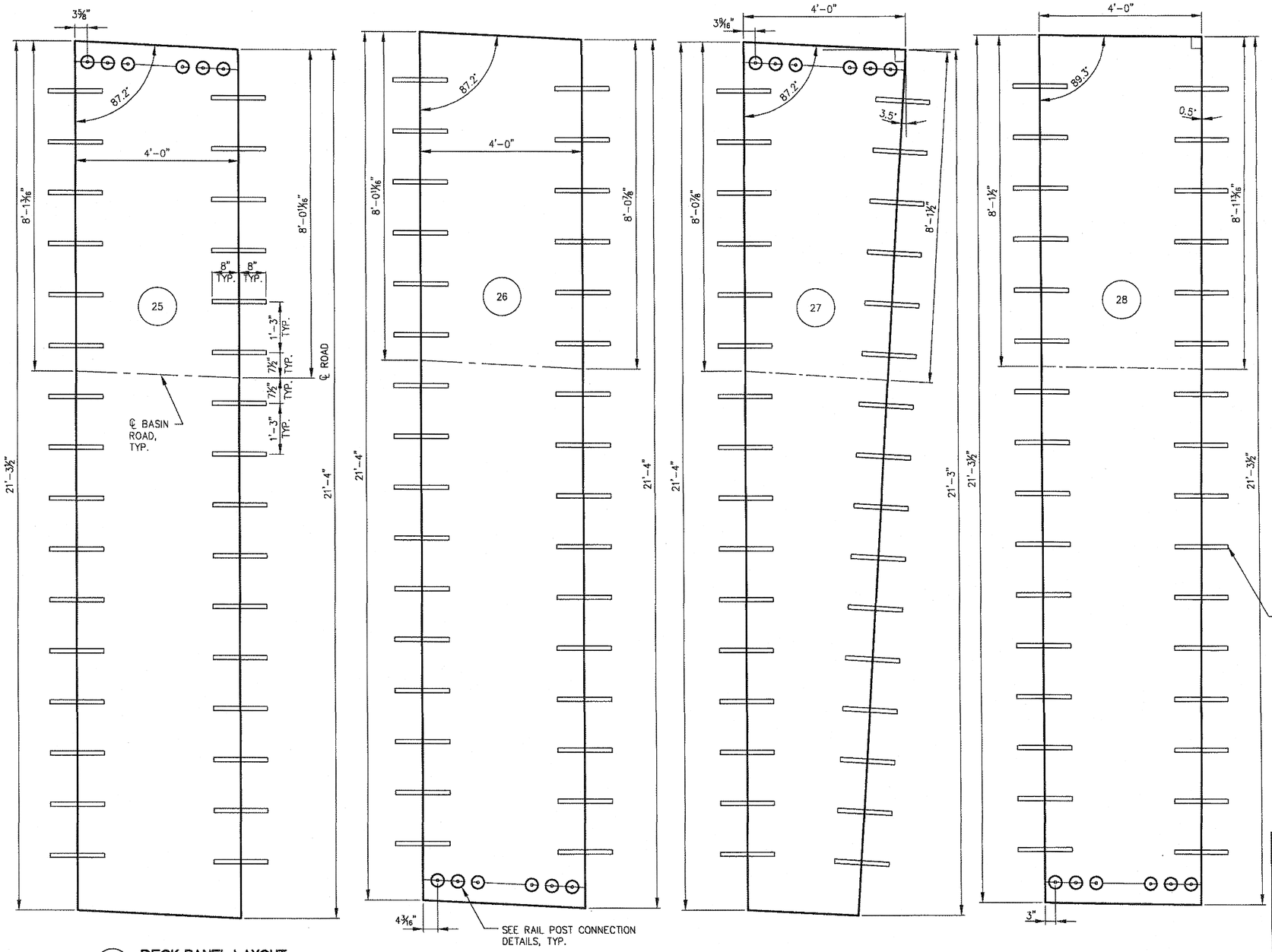

A DECK PANEL LAYOUT

NOTE:

PRE-DRILL RAILING CONNECTION HOLES AND FOR SHEAR PLATES PRIOR TO TREATMENT.

SCALE IN FEET
0 1 2 3

JSK 53/83

PLANS PREPARED BY
PND ENGINEERS, INC.

DO NOT SCALE FROM THESE DRAWINGS USE DIMENSIONS

CHECKED BY:	CMG
DESIGNED BY:	MDS
DRAWN BY:	PJD
PATH:	N:\09XXX\092025 BASIN ROAD TRESTLE\D- DRAWINGS\PND\FINAL DESIGN\N4.1.DWG
TAB:	N4.8 Monday, January 24, 2011 3:31:08 PM KATHERINE LUNDQUIST

STATE OF ALASKA
DEPARTMENT OF TRANSPORTATION
& PUBLIC FACILITIES
SOUTHEAST REGION

JUNEAU BRIDGE REPAIR & UPGRADE BASIN ROAD TRESTLE BRIDGE NO.948

DECK PANEL LAYOUT

REVISIONS NO.	DATE	DESCRIPTION	PROJECT DESIGNATION	YEAR	SHEET NO.	TOTAL SHEETS
			68979/BR-0003(144)	2010	N4.8	58

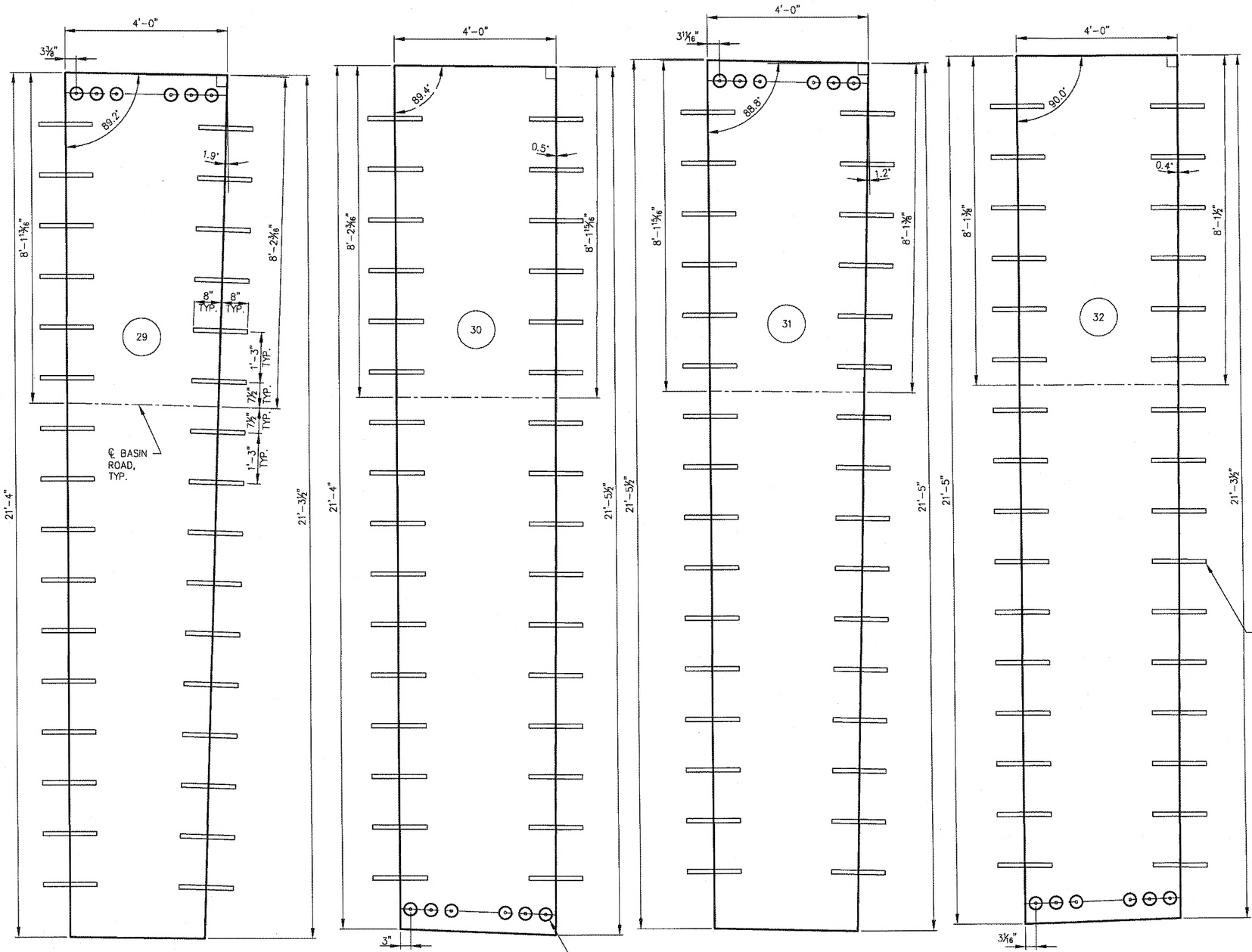

A DECK PANEL LAYOUT

NOTE:
PRE-DRILL RAILING CONNECTION HOLES AND FOR SHEAR PLATES PRIOR TO TREATMENT.

SCALE IN FEET 0 1 2 3

JSK 5/4/83

PLANS PREPARED BY PND ENGINEERS, INC.

DO NOT SCALE FROM THESE DRAWINGS USE DIMENSIONS

CHECKED BY: CMG

STATE OF ALASKA
DEPARTMENT OF TRANSPORTATION & PUBLIC FACILITIES
SOUTHEAST REGION

JUNEAU BRIDGE REPAIR & UPGRADE BASIN ROAD TRESTLE BRIDGE NO.948

DECK PANEL LAYOUT

DESIGNED BY: MDS
DRAWN BY: PJD

PATH: N:\09XXX\092025 BASIN ROAD TRESTLE\D- DRAWINGS\PND\FINAL DESIGN\N4.1.DWG
TAB: N4.9 Monday, January 24, 2011 3:31:18 PM KATHERINE LUNDQUIST

REVISIONS			PROJECT DESIGNATION	YEAR	SHEET NO.	TOTAL SHEETS
NO.	DATE	DESCRIPTION	68979/BR-0003(144)	2010	N4.9	58

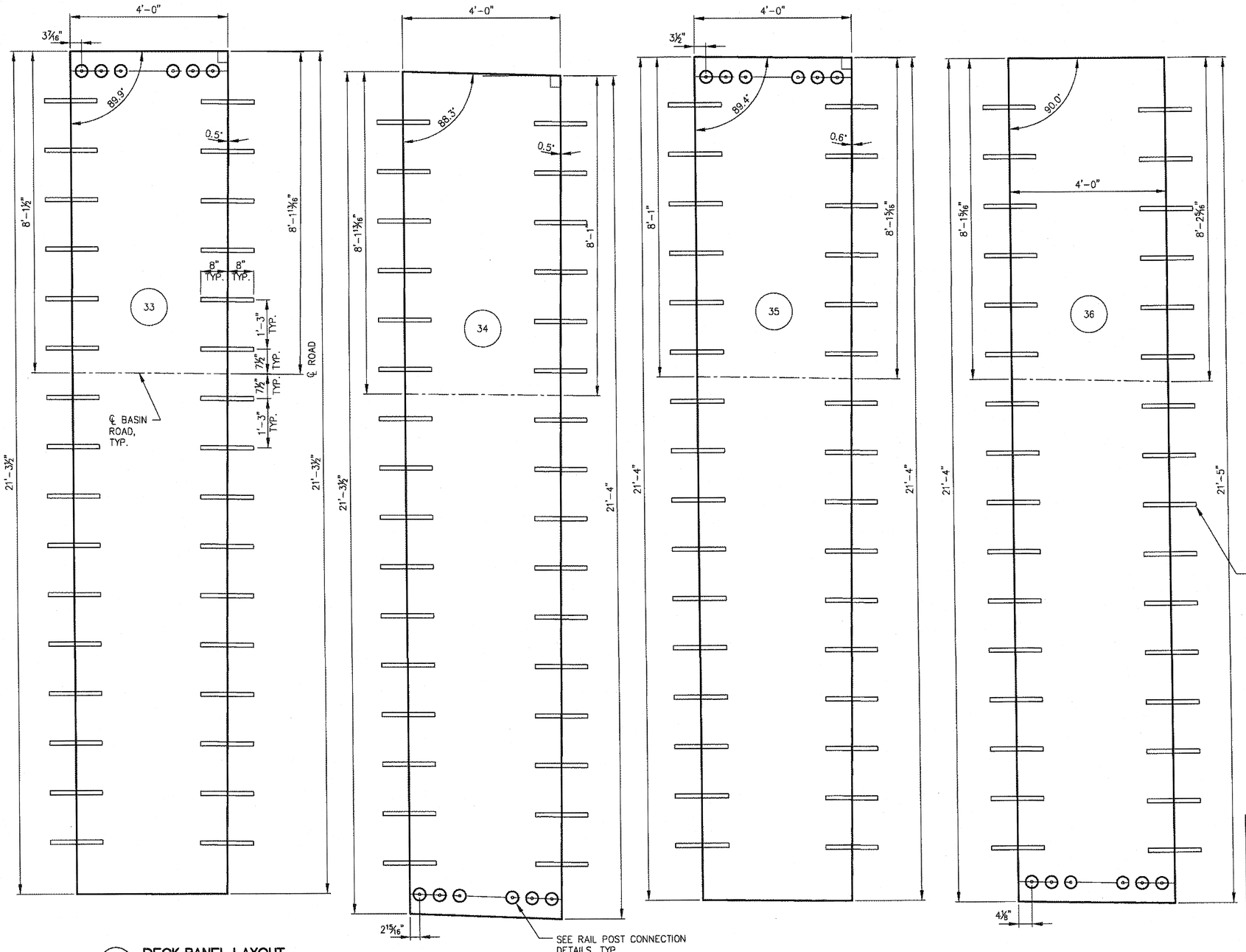

A DECK PANEL LAYOUT

NOTE:

PRE-DRILL RAILING CONNECTION HOLES AND FOR SHEAR PLATES PRIOR TO TREATMENT.

SCALE IN FEET
0 1 2 3

JSK 55/83

PLANS PREPARED BY PND ENGINEERS, INC.

DO NOT SCALE FROM THESE DRAWINGS USE DIMENSIONS

CHECKED BY: CMG

STATE OF ALASKA
DEPARTMENT OF TRANSPORTATION
& PUBLIC FACILITIES
SOUTHEAST REGION

JUNEAU BRIDGE REPAIR & UPGRADE BASIN ROAD TRESTLE BRIDGE NO.948

DECK PANEL LAYOUT

DESIGNED BY: MDS
DRAWN BY: PJD

PATH: N:\09XXX\092025 BASIN ROAD TRESTLE\D- DRAWINGS\PND\FINAL DESIGN\N4.1.DWG
TAB: N4.10 Monday, January 24, 2011 3:31:28 PM KATHERINE LUNDQUIST

REVISIONS			PROJECT DESIGNATION	YEAR	SHEET NO.	TOTAL SHEETS
NO.	DATE	DESCRIPTION				
			68979/BR-0003(144)	2010	N4.10	58

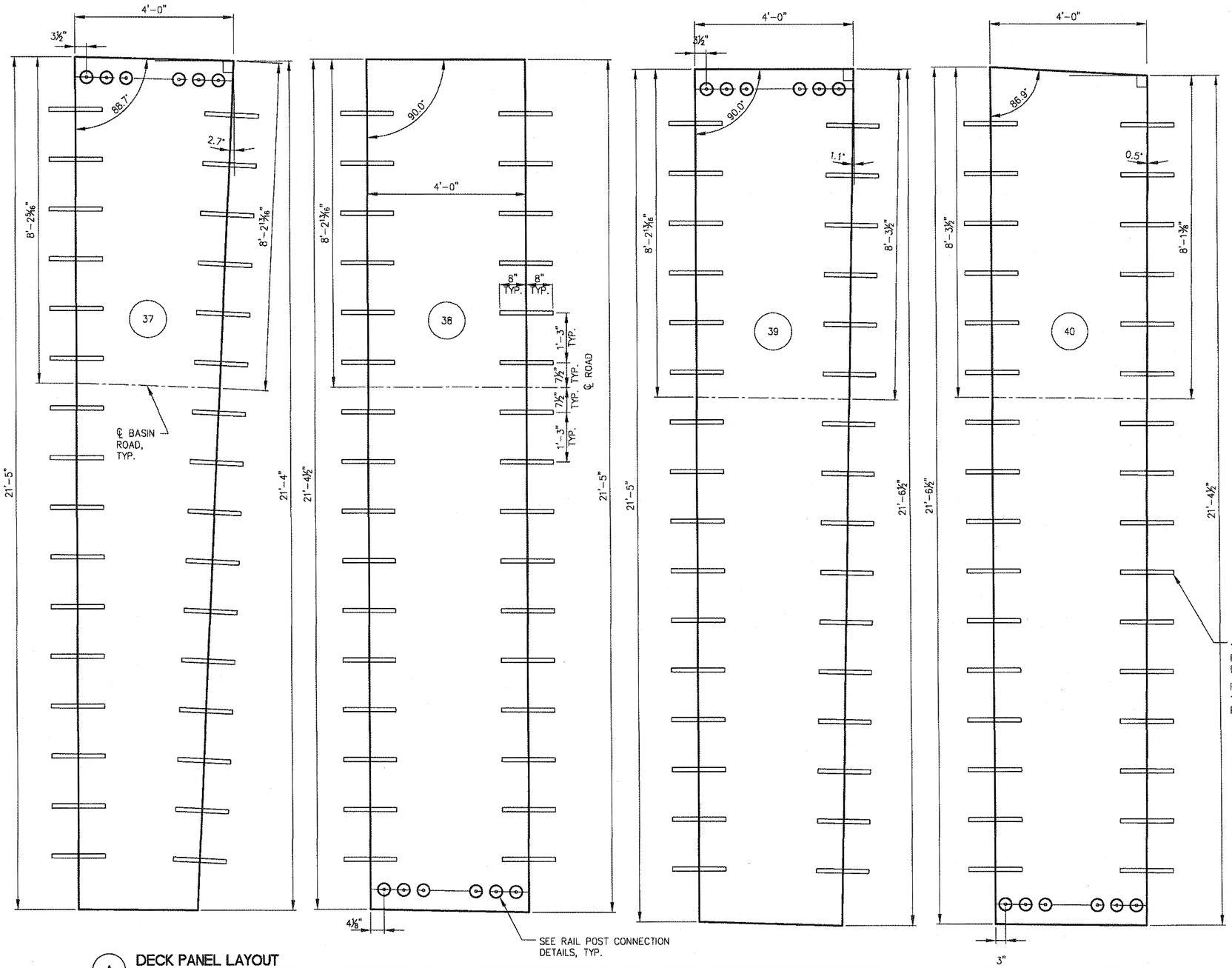

A DECK PANEL LAYOUT

NOTE:

PRE-DRILL RAILING CONNECTION HOLES AND FOR SHEAR PLATES PRIOR TO TREATMENT.

SCALE IN FEET
0 1 2 3

JSK 56/83

PLANS PREPARED BY PND ENGINEERS, INC.

DO NOT SCALE FROM THESE DRAWINGS USE DIMENSIONS

CHECKED BY: CMG	STATE OF ALASKA DEPARTMENT OF TRANSPORTATION & PUBLIC FACILITIES SOUTHEAST REGION
DESIGNED BY: MDS	JUNEAU BRIDGE REPAIR & UPGRADE BASIN ROAD TRESTLE BRIDGE NO.948
DRAWN BY: PJD	**DECK PANEL LAYOUT**

Christopher Gianotti Jan 24, 2011 CE-7559 REGISTERED PROFESSIONAL ENGINEER

PATH: N:\09XXX\092025 BASIN ROAD TRESTLE\D- DRAWINGS\PND\FINAL DESIGN\N4.1.DWG
TAB: N4.11 Monday, January 24, 2011 3:31:38 PM KATHERINE LUNDQUIST

REVISIONS NO.	DATE	DESCRIPTION	PROJECT DESIGNATION	YEAR	SHEET NO.	TOTAL SHEETS
			68979/BR-0003(144)	2010	N4.11	58

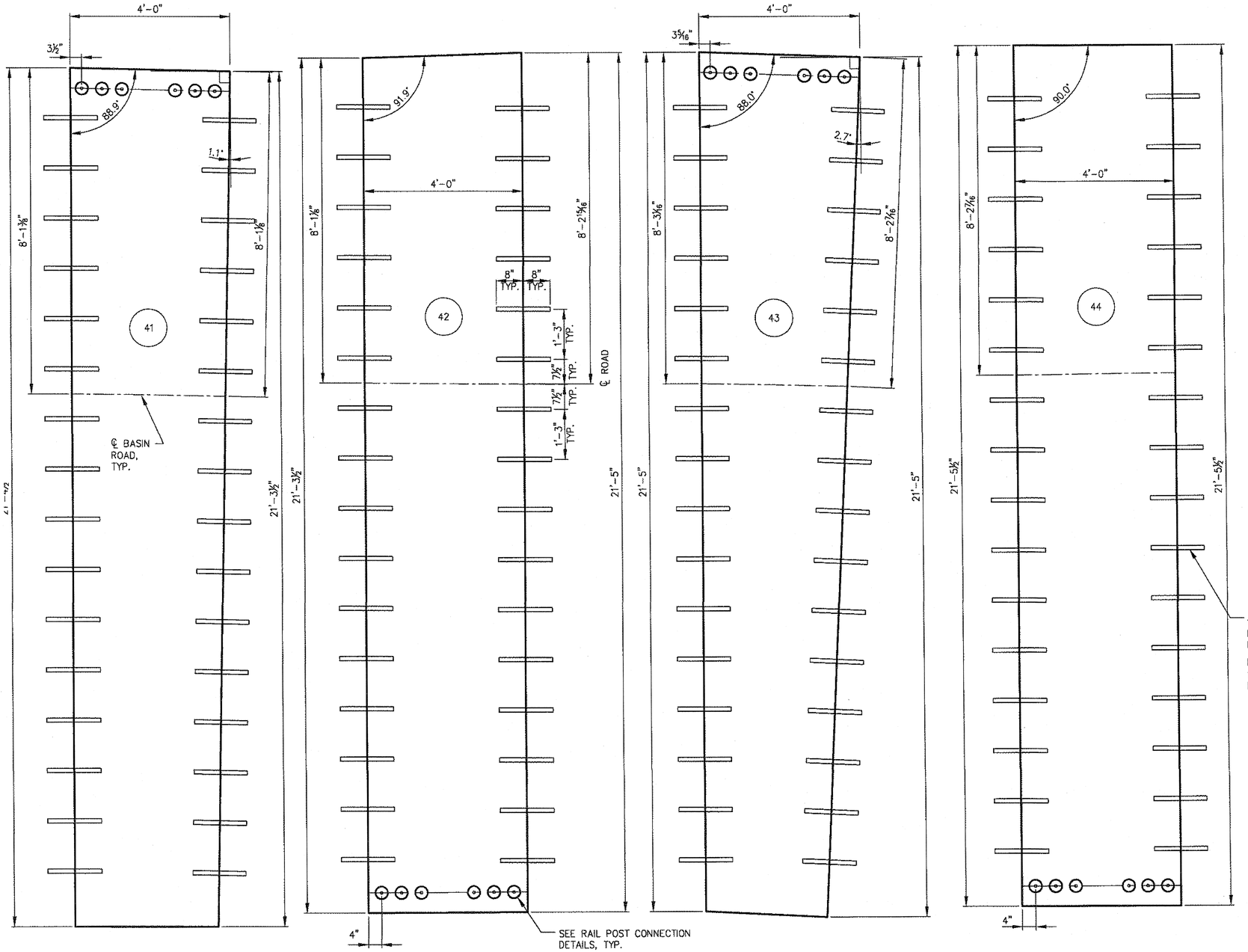

A DECK PANEL LAYOUT

NOTE:

PRE-DRILL RAILING CONNECTION HOLES AND FOR SHEAR PLATES PRIOR TO TREATMENT.

SCALE IN FEET 0 1 2

JSK 57/83

PLANS PREPARED BY PND ENGINEERS, INC.

DO NOT SCALE FROM THESE DRAWINGS USE DIMENSIONS

CHECKED BY: CMG

STATE OF ALASKA
DEPARTMENT OF TRANSPORTATION
& PUBLIC FACILITIES
SOUTHEAST REGION

JUNEAU BRIDGE REPAIR & UPGRADE
BASIN ROAD TRESTLE BRIDGE NO.948
DEPARTMENT OF TRANSPORTATION LAYOUT

DESIGNED BY: MDS

DRAWN BY: PJD

PATH: N:\09XXX\092025 BASIN ROAD TRESTLE\D- DRAWINGS\PND\FINAL DESIGN\N4.1.DWG

TAB: N4.12 Monday, January 24, 2011 3:31:48 PM KATHERINE LUNDQUIST

REVISIONS NO.	DATE	DESCRIPTION	PROJECT DESIGNATION	YEAR	SHEET NO.	TOTAL SHEETS
			68979/BR-0003(144)	2010	N4.12	58

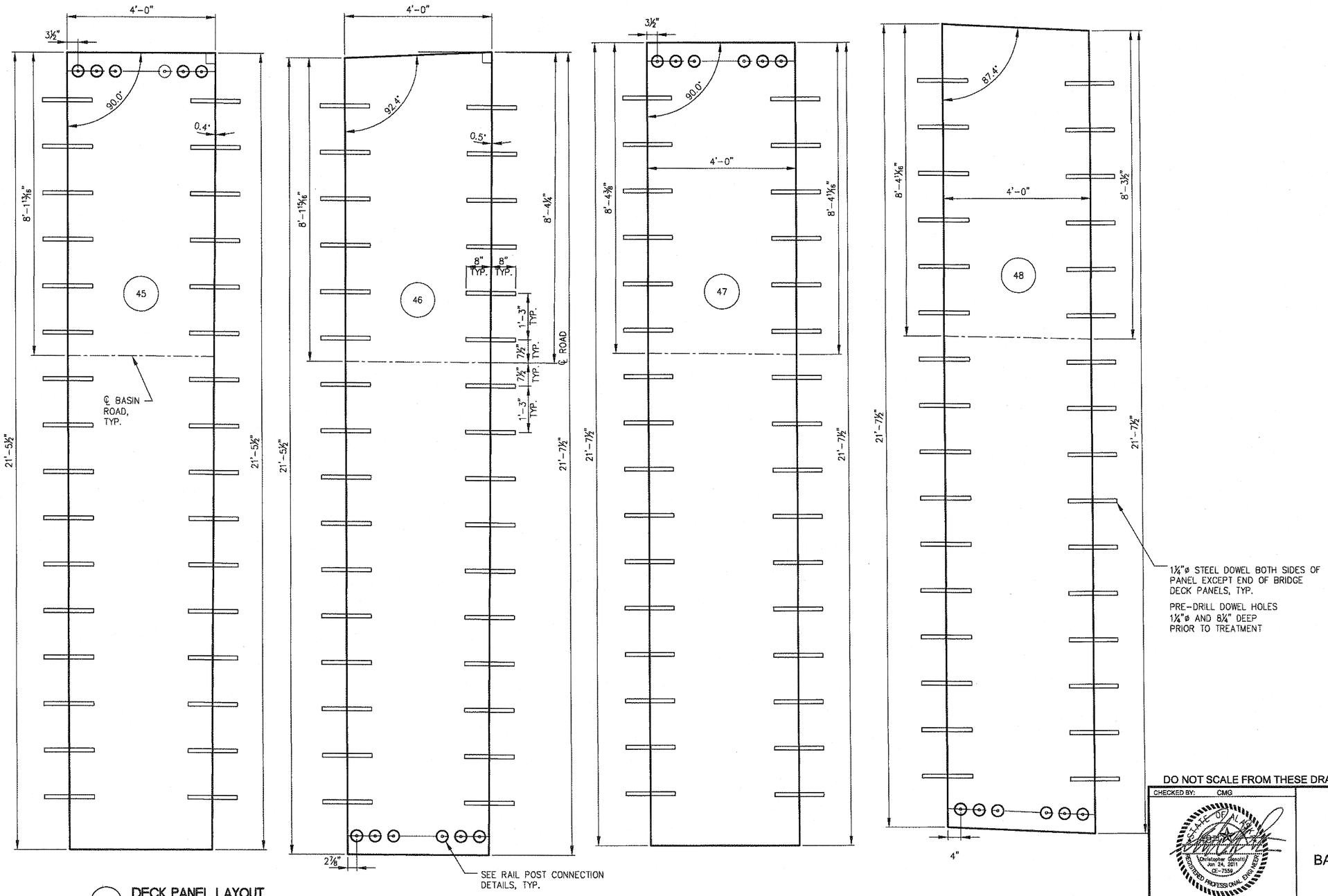

A DECK PANEL LAYOUT

NOTE:
PRE-DRILL RAILING CONNECTION HOLES AND FOR SHEAR PLATES PRIOR TO TREATMENT.

SCALE IN FEET
0 1 2 3

JSK
58/83

PLANS PREPARED BY PND ENGINEERS, INC.

DO NOT SCALE FROM THESE DRAWINGS USE DIMENSIONS

CHECKED BY: CMG

STATE OF ALASKA
DEPARTMENT OF TRANSPORTATION & PUBLIC FACILITIES
SOUTHEAST REGION

JUNEAU BRIDGE REPAIR & UPGRADE
BASIN ROAD TRESTLE BRIDGE
NO.948
DECK PANEL LAYOUT

DESIGNED BY: MDS
DRAWN BY: PJD

PATH: N:\09XXX\092025 BASIN ROAD TRESTLE\D- DRAWINGS\PND\FINAL DESIGN\N4.1.DWG
TAB: N4.13 Monday, January 24, 2011 3:31:58 PM KATHERINE LUNDQUIST

REVISIONS			PROJECT DESIGNATION	YEAR	SHEET NO.	TOTAL SHEETS
NO.	DATE	DESCRIPTION	68979/BR-0003(144)	2010	N4.13	58

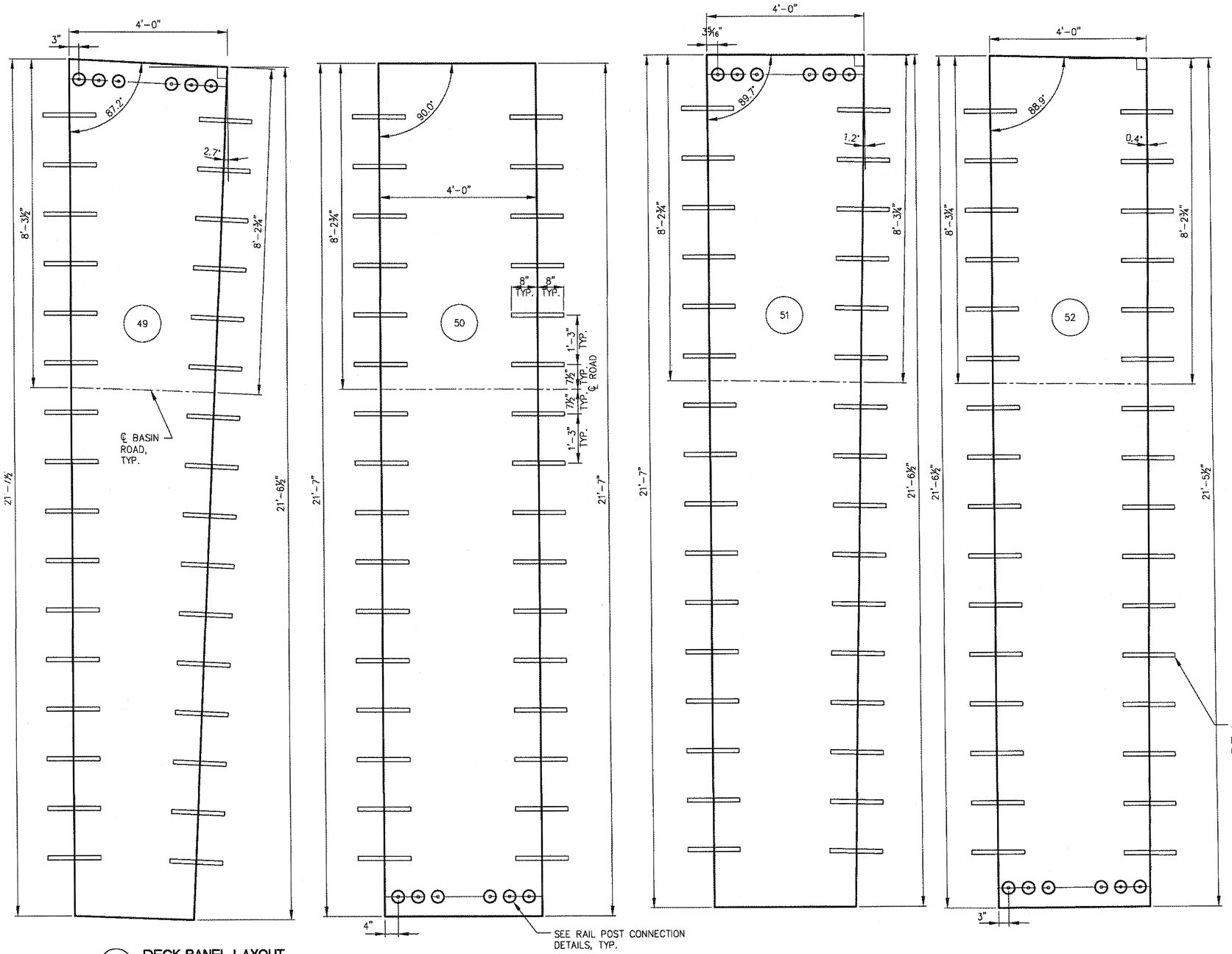

A DECK PANEL LAYOUT

NOTE:

PRE-DRILL RAILING CONNECTION HOLES AND FOR SHEAR PLATES PRIOR TO TREATMENT.

SCALE IN FEET
0 1 2 3

JSF 59/83

PLANS PREPARED BY PND ENGINEERS, INC.

DO NOT SCALE FROM THESE DRAWINGS USE DIMENSIONS

CHECKED BY: CMG

STATE OF ALASKA
Christopher Gilbreth
Jan 24, 2011
CE-7559
REGISTERED PROFESSIONAL ENGINEER

DESIGNED BY: MDS

DRAWN BY: PJD

STATE OF ALASKA
DEPARTMENT OF TRANSPORTATION & PUBLIC FACILITIES
SOUTHEAST REGION

JUNEAU BRIDGE REPAIR & UPGRADE
BASIN ROAD TRESTLE BRIDGE NO.948
DEPOT PANEL LAYOUT

PATH: N:\08XXX\092025 BASIN ROAD TRESTLE\D- DRAWINGS\PND\FINAL DESIGN\N4.1.DWG

TAB: N4.14 Monday, January 24, 2011 3:32:08 PM KATHERINE LUNDQUIST

REVISIONS			PROJECT DESIGNATION	YEAR	SHEET NO.	TOTAL SHEETS
NO.	DATE	DESCRIPTION				
			68979/BR-0003(144)	2010	N4.14	58

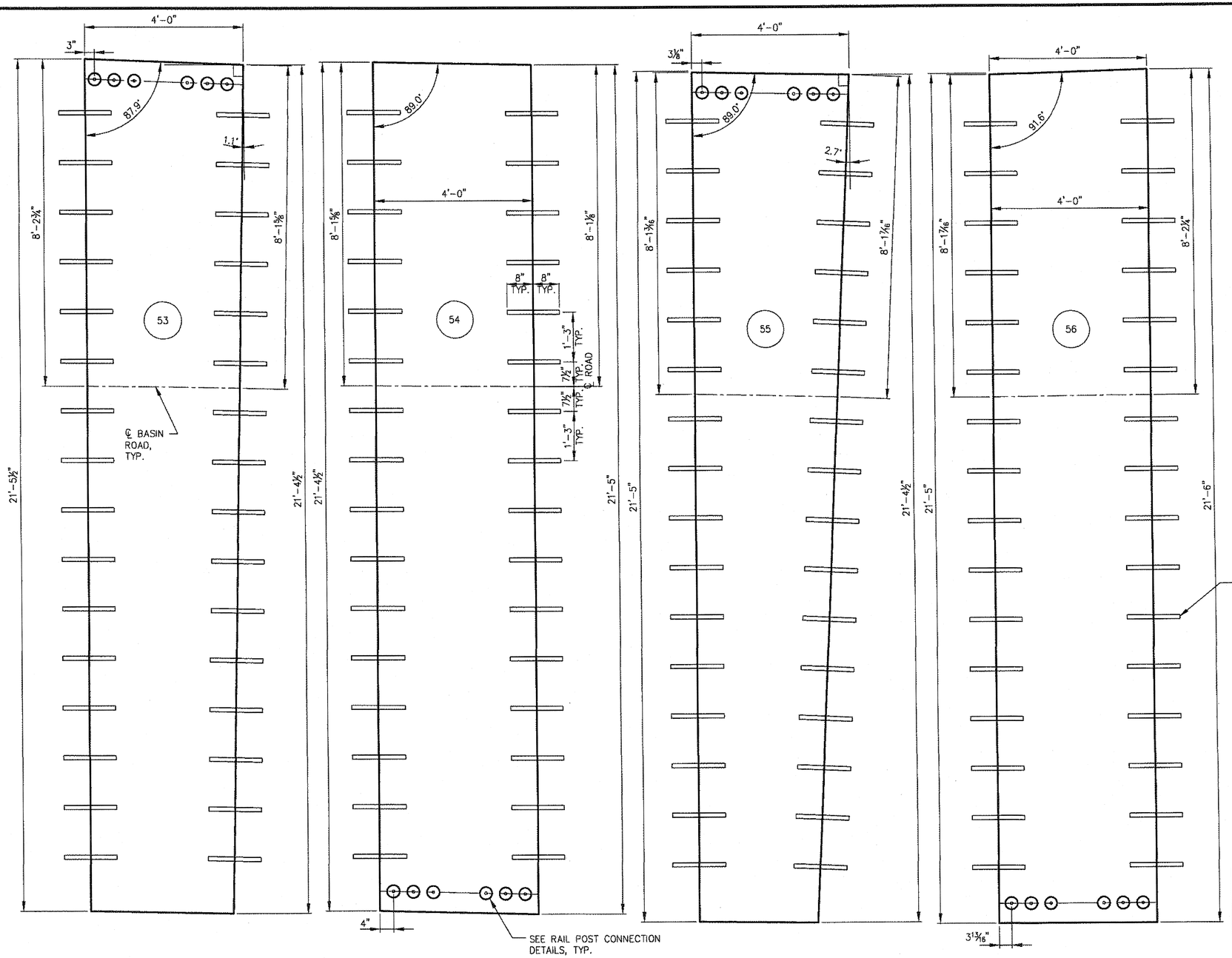

A DECK PANEL LAYOUT

NOTE:
PRE-DRILL RAILING CONNECTION HOLES AND FOR SHEAR PLATES PRIOR TO TREATMENT.

SCALE IN FEET
0 1 2 3

JSK 6/6/83
PLANS PREPARED BY PND ENGINEERS, INC.

DO NOT SCALE FROM THESE DRAWINGS USE DIMENSIONS

CHECKED BY: CMG
DESIGNED BY: MDS
DRAWN BY: PJD

STATE OF ALASKA
Christopher Gianotti Jan 24, 2011 CE-7559
REGISTERED PROFESSIONAL ENGINEER

STATE OF ALASKA
DEPARTMENT OF TRANSPORTATION & PUBLIC FACILITIES
SOUTHEAST REGION

JUNEAU BRIDGE REPAIR & UPGRADE BASIN ROAD TRESTLE BRIDGE NO.948
DECK PANEL LAYOUT

PATH: N:\09XXX\092025 BASIN ROAD TRESTLE\D- DRAWINGS\PND\FINAL DESIGN\N4.1.DWG
TAB: N4.15 Monday, January 24, 2011 3:32:18 PM KATHERINE LUNDQUIST

REVISIONS NO.	DATE	DESCRIPTION	PROJECT DESIGNATION	YEAR	SHEET NO.	TOTAL SHEETS
			68979/BR-0003(144)	2010	N4.15	58

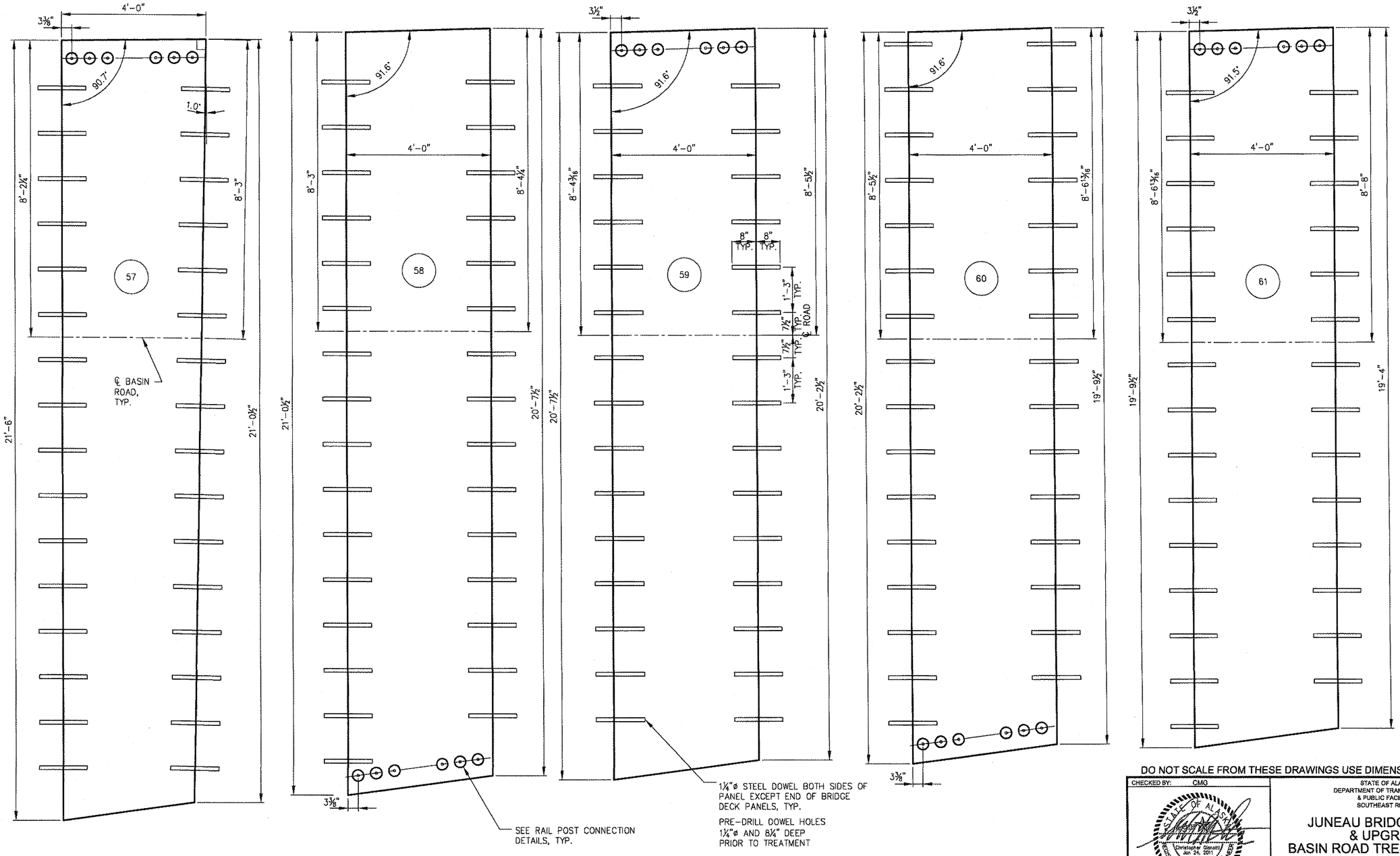

A DECK PANEL LAYOUT

NOTE:
PRE-DRILL RAILING CONNECTION HOLES AND FOR SHEAR PLATES PRIOR TO TREATMENT.

SCALE IN FEET
0 1 2 3

JSK 6/1/83
PLANS PREPARED BY
PND ENGINEERS, INC.

DO NOT SCALE FROM THESE DRAWINGS USE DIMENSIONS

CHECKED BY: CMG
DESIGNED BY: MDS
DRAWN BY: PJD

STATE OF ALASKA
Christopher Gianotti
Jan 24, 2011
CE-7555
REGISTERED PROFESSIONAL ENGINEER

STATE OF ALASKA
DEPARTMENT OF TRANSPORTATION
& PUBLIC FACILITIES
SOUTHEAST REGION

JUNEAU BRIDGE REPAIR & UPGRADE BASIN ROAD TRESTLE BRIDGE NO.948
DECK PANEL LAYOUT

PATH: N:\09XXX\092025 BASIN ROAD TRESTLE\D- DRAWINGS\PND\FINAL DESIGN\N4.1.DWG
TAB: N4.16 Monday, January 24, 2011 3:32:28 PM KATHERINE LUNDQUIST

REVISIONS NO.	DATE	DESCRIPTION	PROJECT DESIGNATION	YEAR	SHEET NO.	TOTAL SHEETS
			68979/BR-0003(144)	2010	N4.16	58

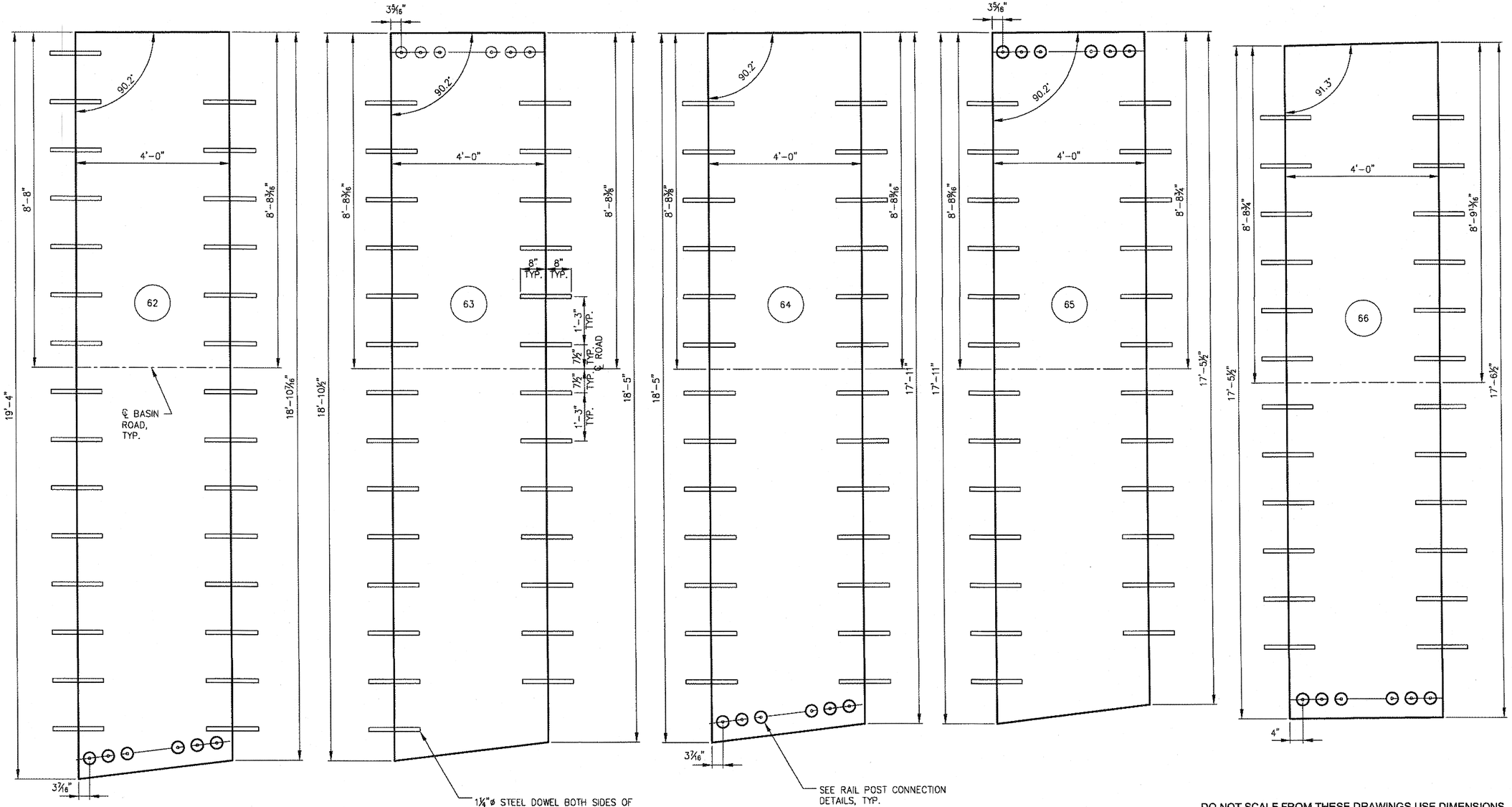

A DECK PANEL LAYOUT

NOTE:
PRE-DRILL RAILING CONNECTION HOLES AND FOR SHEAR PLATES PRIOR TO TREATMENT.

SCALE IN FEET
0 1 2 3

JSK 6 2/83

PLANS PREPARED BY PND ENGINEERS, INC.

DO NOT SCALE FROM THESE DRAWINGS USE DIMENSIONS

CHECKED BY: CMG

STATE OF ALASKA
DEPARTMENT OF TRANSPORTATION & PUBLIC FACILITIES
SOUTHEAST REGION

JUNEAU BRIDGE REPAIR & UPGRADE
BASIN ROAD TRESTLE BRIDGE
NO.948

DECK PANEL LAYOUT

DESIGNED BY: MDS
DRAWN BY: PJD

PATH: N:\09XXX\092025 BASIN ROAD TRESTLE\D- DRAWINGS\PND\FINAL DESIGN\N4.1.DWG
TAB: N4.17 Monday, January 24, 2011 3:32:38 PM KATHERINE LUNDQUIST

REVISIONS			PROJECT DESIGNATION	YEAR	SHEET NO.	TOTAL SHEETS
NO.	DATE	DESCRIPTION	68979/BR-0003(144)	2010	N4.17	58

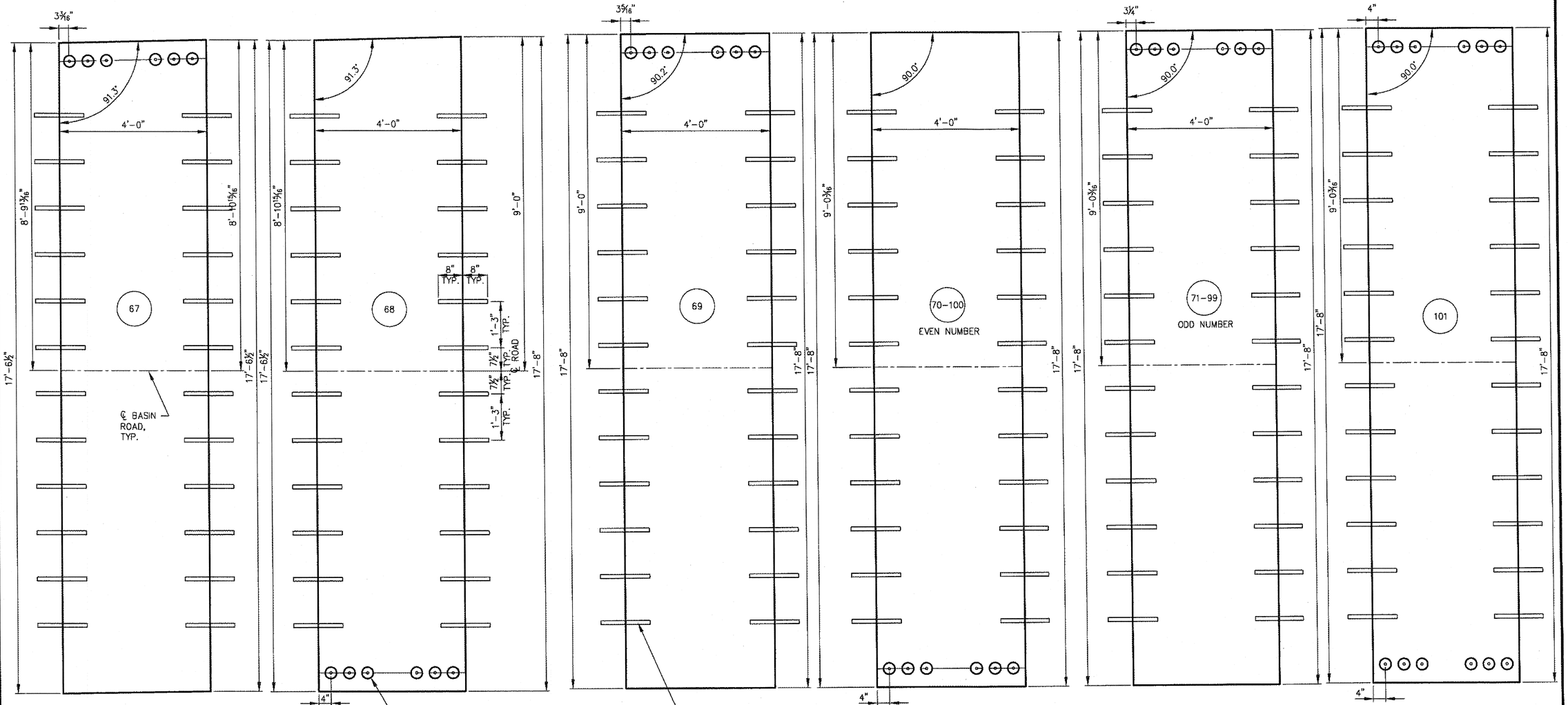

A DECK PANEL LAYOUT

NOTE:

PRE-DRILL RAILING CONNECTION HOLES AND FOR SHEAR PLATES PRIOR TO TREATMENT.

SCALE IN FEET
0 1 2 3

JSK
63/83

PLANS PREPARED BY
PND ENGINEERS, INC.

DO NOT SCALE FROM THESE DRAWINGS USE DIMENSIONS

CHECKED BY: CMG

STATE OF ALASKA
REGISTERED PROFESSIONAL ENGINEER
Christopher Glanotti
Jan 24, 2011
CE-7556

DESIGNED BY: MDS
DRAWN BY: PJD

STATE OF ALASKA
DEPARTMENT OF TRANSPORTATION
& PUBLIC FACILITIES
SOUTHEAST REGION

JUNEAU BRIDGE REPAIR & UPGRADE BASIN ROAD TRESTLE BRIDGE NO.948

DECK PANEL LAYOUT

PATH: N:\09XXX\092025 BASIN ROAD TRESTLE\D- DRAWINGS\PND\FINAL DESIGN\N4.1.DWG
TAB: N4.18 Monday, January 24, 2011 3:32:48 PM KATHERINE LUNDQUIST

REVISIONS NO.	DATE	DESCRIPTION

PROJECT DESIGNATION	YEAR	SHEET NO.	TOTAL SHEETS
68979/BR-0003(144)	2010	N4.18	58

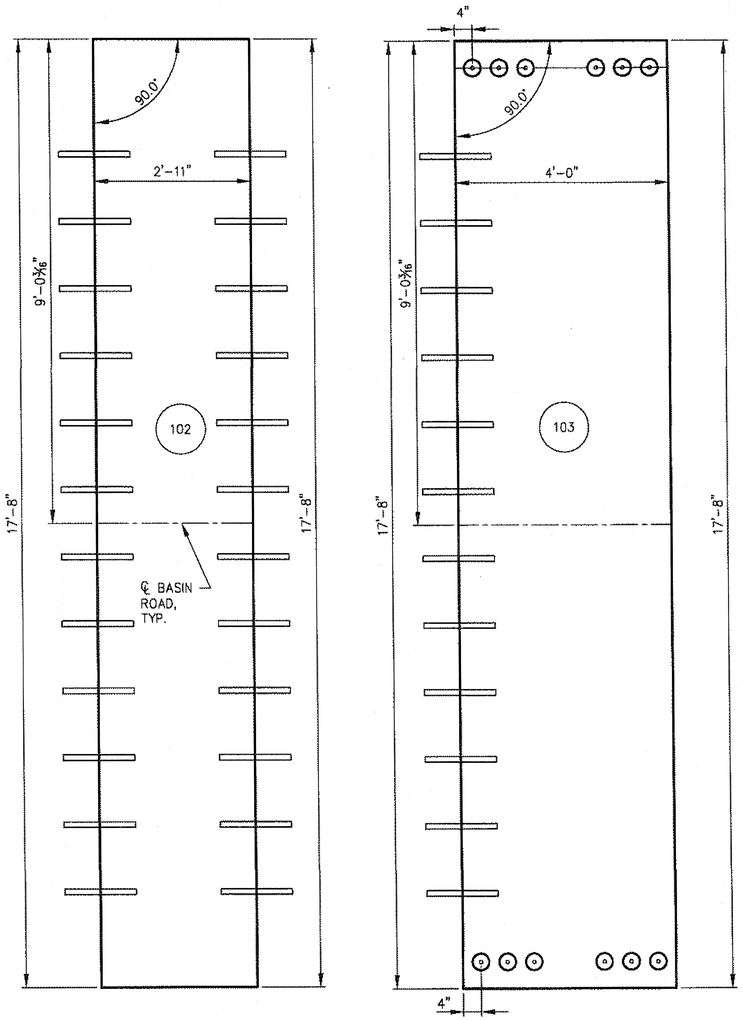

A DECK PANEL LAYOUT

NOTE:

PRE-DRILL RAILING CONNECTION HOLES AND FOR SHEAR PLATES PRIOR TO TREATMENT.

SCALE IN FEET

0 1 2 3

DO NOT SCALE FROM THESE DRAWINGS USE DIMENSIONS

CHECKED BY: CMG

STATE OF ALASKA
Christopher Gilmott
Jan 24, 2011
CE-7558
REGISTERED PROFESSIONAL ENGINEER

DESIGNED BY: MDS

DRAWN BY: PJD

PATH: N:\09XXX\092025 BASIN ROAD TRESTLE\D- DRAWINGS\PND\FINAL DESIGN\N4.1.DWG

TAB: N4.19 Monday, January 24, 2011 3:32:58 PM KATHERINE LUNDQUIST

STATE OF ALASKA
DEPARTMENT OF TRANSPORTATION
& PUBLIC FACILITIES
SOUTHEAST REGION

JUNEAU BRIDGE REPAIR & UPGRADE BASIN ROAD TRESTLE BRIDGE NO.948

DECK PANEL LAYOUT

REVISIONS NO.	DATE	DESCRIPTION	PROJECT DESIGNATION	YEAR	SHEET NO.	TOTAL SHEETS
			68979/BR-0003(144)	2010	N4.19	58

JSK
64/83

PLANS PREPARED BY
PND ENGINEERS, INC.

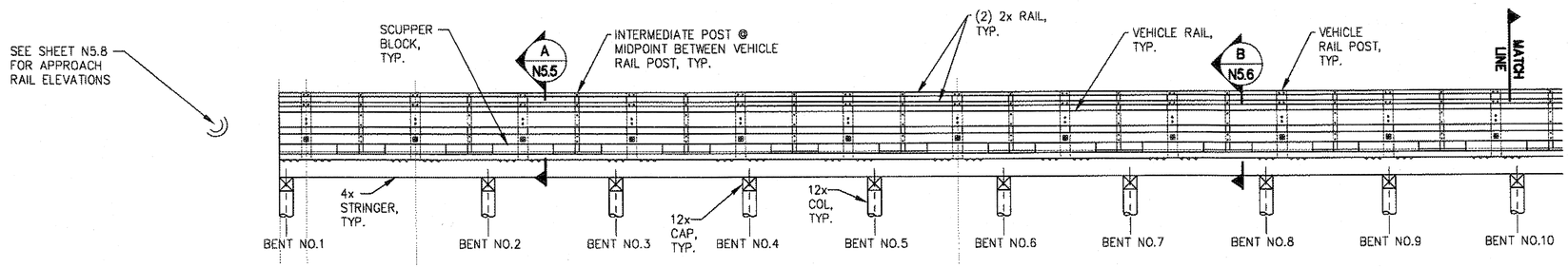

A **NORTH RAIL ELEVATION**
BENT NO. 1 TO BENT NO. 10

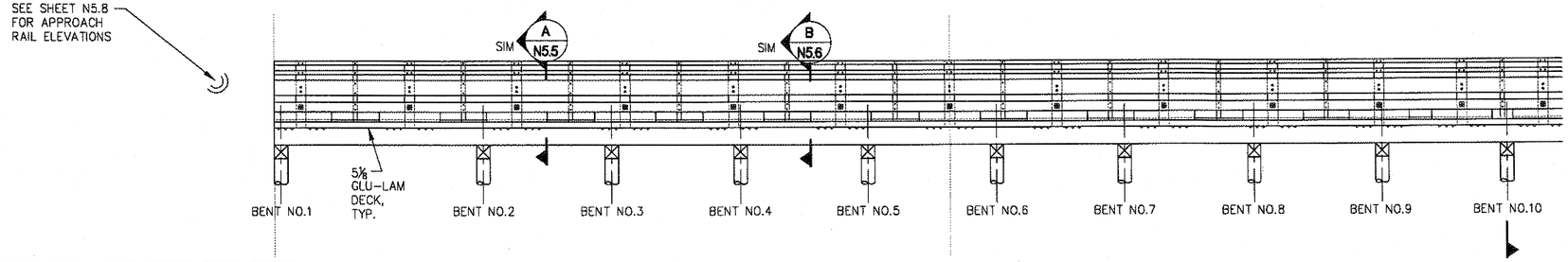

B **SOUTH RAIL ELEVATION**
BENT NO. 1 TO BENT NO. 10

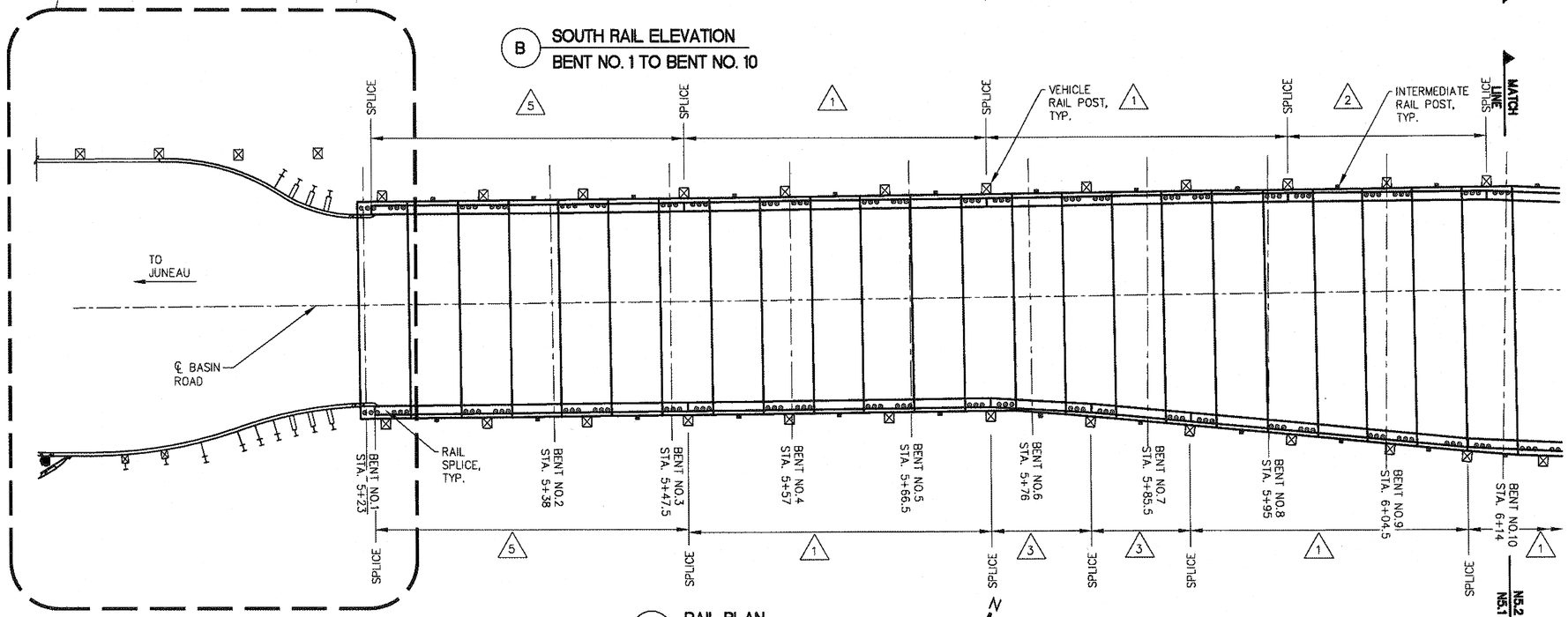

C **RAIL PLAN**
BENT NO. 1 TO BENT NO. 10

SCALE IN FEET
0 5 10 FT.

NOTES:

1. SHIM VEHICLE RAIL AND CURB RAIL AT VEHICLE RAIL POST AS REQUIRED, SEE RAIL SPLICE SCHEDULE FOR SPLICE LENGTHS; SHIM USING SINGLE TREATED TIMBER MEMBERS w/ 5½" MAX. THICKNESS.
2. # INDICATES RAIL MARK LENGTH, SEE N5.4 FOR RAIL SCHEDULE.

DO NOT SCALE FROM THESE DRAWINGS USE DIMENSIONS

JSK
65/83

PATH: N:\09XXX\092025 BASIN ROAD TRESTLE\D-DRAWINGS\PND\FINAL DESIGN\DEMO_DECK_RAIL PLAN.DWG
KATHERINE LUNDQUIST
TAB: N5.1 Monday, January 24, 2011 3:27:24 PM

ADDENDUM NUMBER
ATTACHMENT NUMBER

RECORD OF REVISIONS

No.	DATE	DESCRIPTION

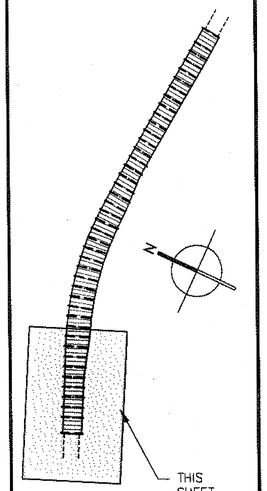

PLAN LEGEND

CHECKED BY: CMG

STATE OF ALASKA
Christopher Gianotti
Jan 24, 2011
CE-7559
REGISTERED PROFESSIONAL ENGINEER

PLANS PREPARED BY PND ENGINEERS, INC.
DESIGNED BY: MDS
DRAWN BY: PJD

STATE OF ALASKA
DEPARTMENT OF TRANSPORTATION & PUBLIC FACILITIES
SOUTHEAST REGION

JUNEAU BRIDGE REPAIR & UPGRADE
BASIN ROAD TRESTLE BRIDGE NO.948

RAIL PLANS/ ELEVATIONS

PROJECT DESIGNATION	
68979/BR-0003(144)	
STATE	YEAR
ALASKA	2010
SHEET NUMBER	TOTAL SHEETS
N5.1	58

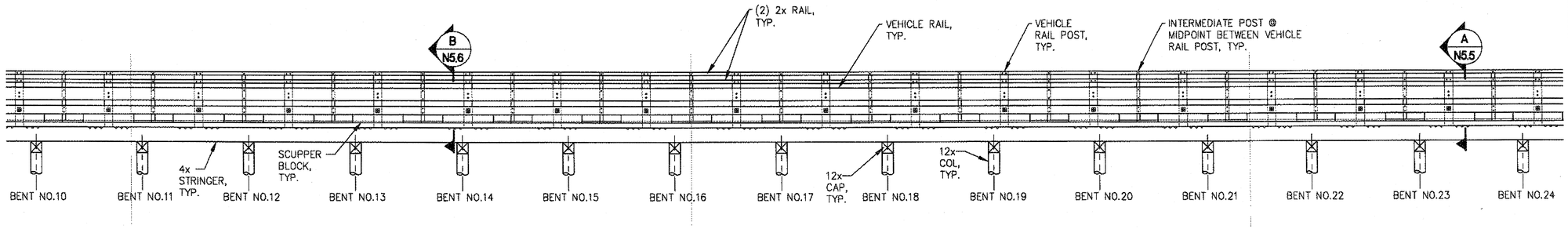

A NORTH RAIL ELEVATION
BENT NO. 10 TO BENT NO. 24

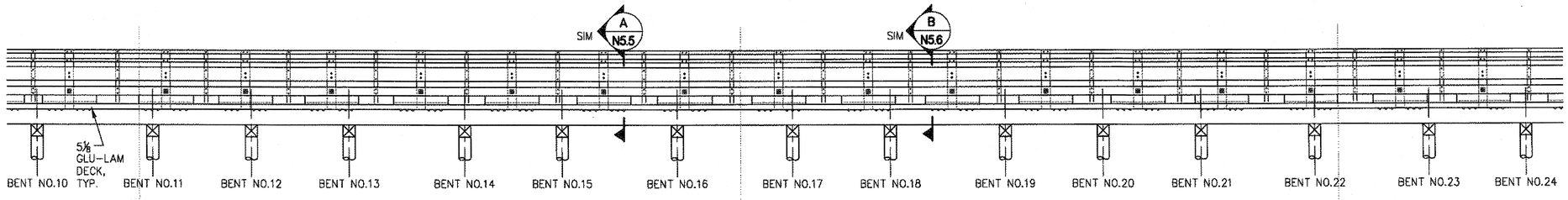

B SOUTH RAIL ELEVATION
BENT NO. 10 TO BENT NO. 24

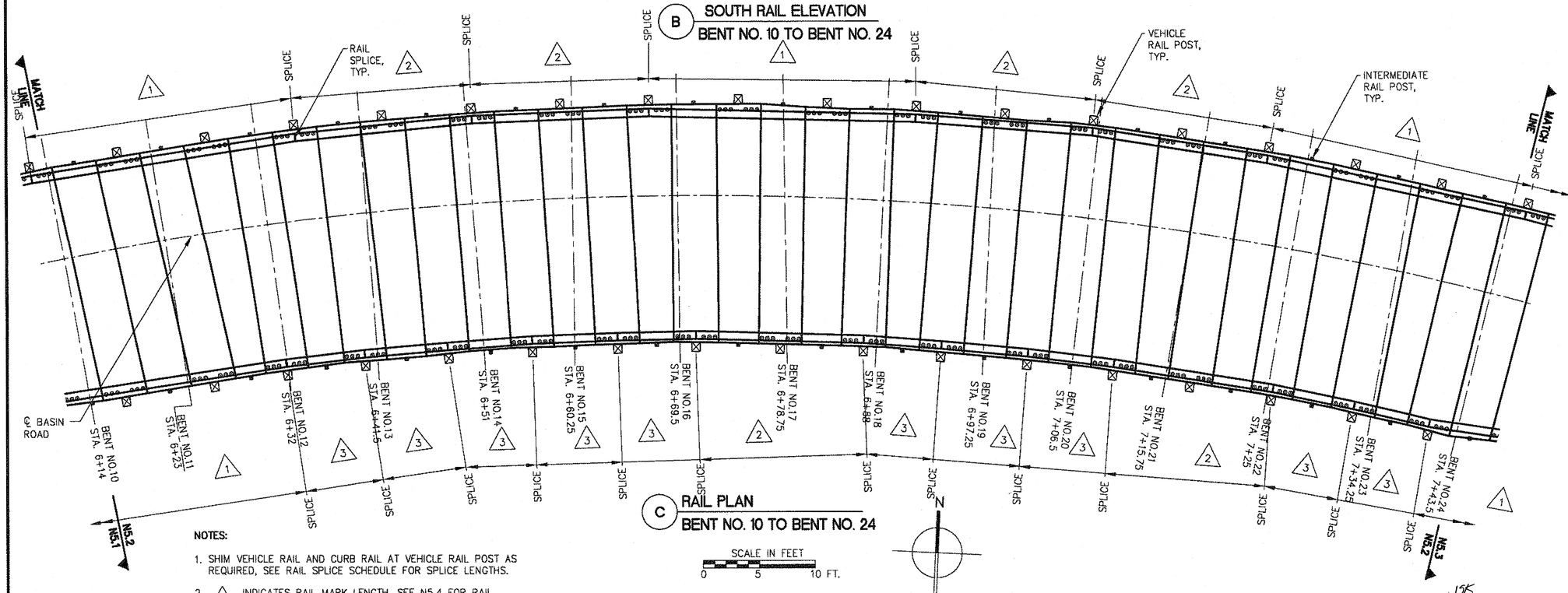

C RAIL PLAN
BENT NO. 10 TO BENT NO. 24

SCALE IN FEET
0 5 10 FT.

NOTES:

1. SHIM VEHICLE RAIL AND CURB RAIL AT VEHICLE RAIL POST AS REQUIRED, SEE RAIL SPLICE SCHEDULE FOR SPLICE LENGTHS.
2. △# INDICATES RAIL MARK LENGTH, SEE N5.4 FOR RAIL SCHEDULE.

DO NOT SCALE FROM THESE DRAWINGS USE DIMENSIONS

JSK 66/183

PATH: N:\09XXX\092025 BASIN ROAD TRESTLE\D-DRAWINGS\PND\FINAL DESIGN\DEMO_DECK_RAIL PLAN.DWG
KATHERINE LUNDQUIST
TAB: N5.2 Monday, January 24, 2011 3:27:34 PM

ADDENDUM NUMBER
ATTACHMENT NUMBER

RECORD OF REVISIONS

No.	DATE	DESCRIPTION

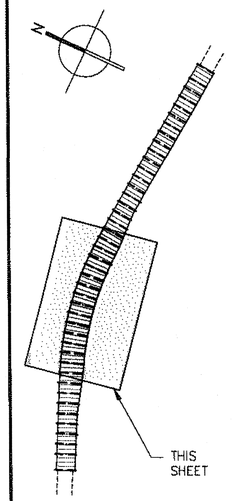

PLAN LEGEND

CHECKED BY: CMG



PLANS PREPARED BY PND ENGINEERS, INC.

DESIGNED BY: MDS

DRAWN BY: PJD

STATE OF ALASKA
DEPARTMENT OF TRANSPORTATION & PUBLIC FACILITIES
SOUTHEAST REGION

JUNEAU BRIDGE REPAIR & UPGRADE
BASIN ROAD TRESTLE BRIDGE NO.948

RAIL PLANS/ ELEVATIONS

PROJECT DESIGNATION	
68979/BR-0003(144)	
STATE	YEAR
ALASKA	2010
SHEET NUMBER	TOTAL SHEETS
N5.2	58

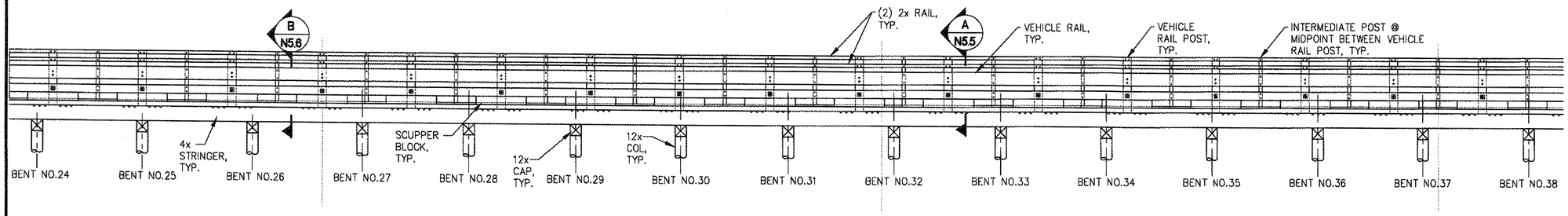

A NORTH RAIL ELEVATION
BENT NO. 24 TO BENT NO. 38

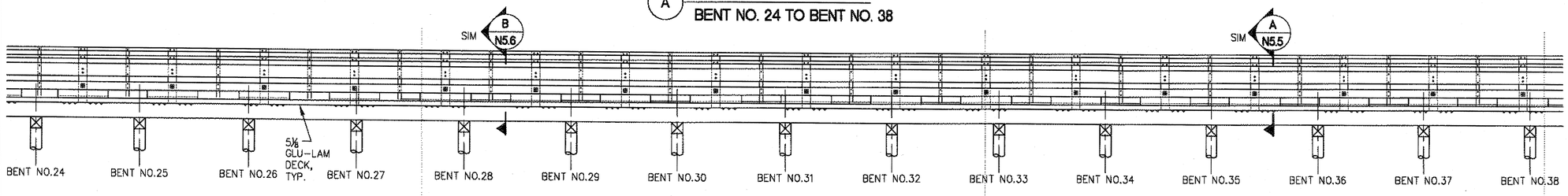

B SOUTH RAIL ELEVATION
BENT NO. 24 TO BENT NO. 38

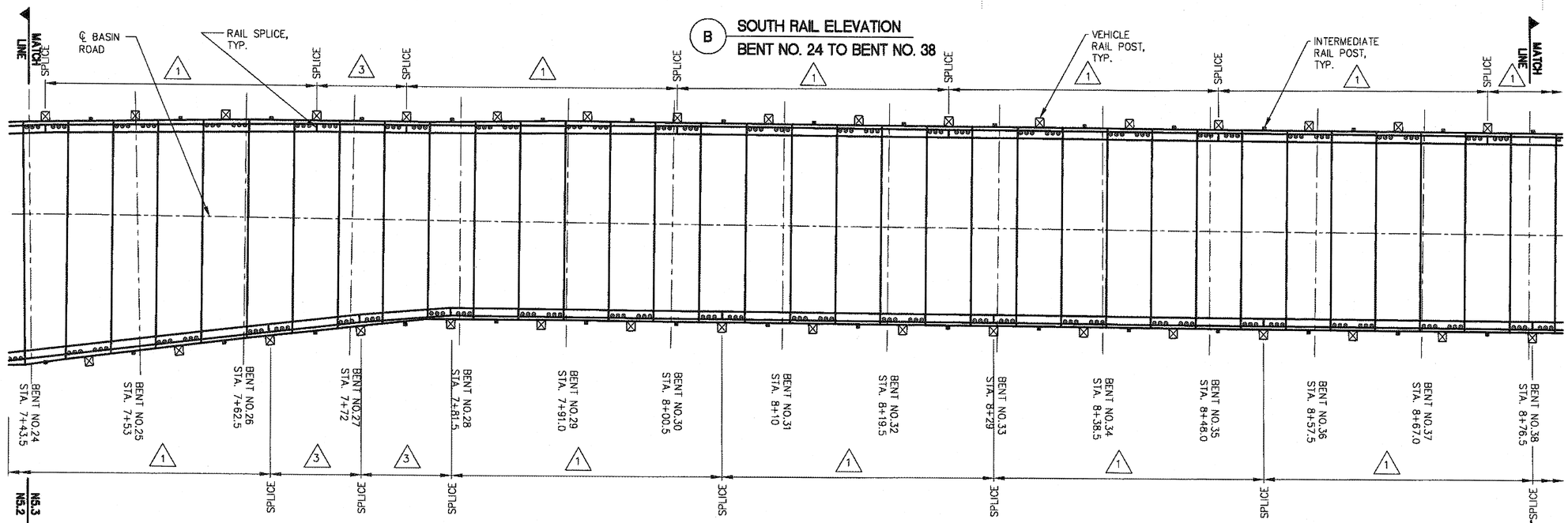

C RAIL PLAN
BENT NO. 24 TO BENT NO. 38

SCALE IN FEET
0 5 10 FT.

NOTES:

1. SHIM VEHICLE RAIL AND CURB RAIL AT VEHICLE RAIL POST AS REQUIRED, SEE RAIL SPLICE SCHEDULE FOR SPLICE LENGTHS.
2. (#) INDICATES RAIL MARK LENGTH, SEE N5.4 FOR RAIL SCHEDULE.

DO NOT SCALE FROM THESE DRAWINGS USE DIMENSIONS

JSK
67/83

PATH:N:\09XXX\092025 BASIN ROAD TRESTLE\D-DRAWINGS\PND\FINAL DESIGN\DEMO_DECK_RAIL PLAN.DWG
KATHERINE LUNDQUIST
TAB: N5.3 Monday, January 24, 2011 3:27:44 PM

ADDENDUM NUMBER

ATTACHMENT NUMBER

RECORD OF REVISIONS

No.	DATE	DESCRIPTION

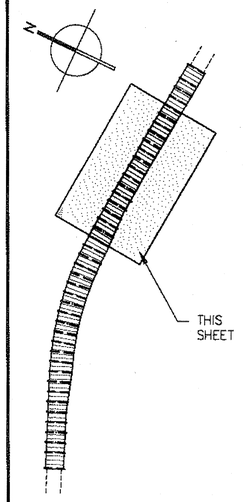

PLAN LEGEND

CHECKED BY: CMG

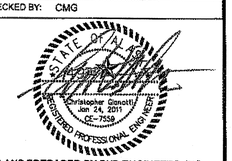

PLANS PREPARED BY PND ENGINEERS, INC.

DESIGNED BY: MDS

DRAWN BY: PJD

STATE OF ALASKA
DEPARTMENT OF TRANSPORTATION & PUBLIC FACILITIES
SOUTHEAST REGION

JUNEAU BRIDGE REPAIR & UPGRADE
BASIN ROAD TRESTLE BRIDGE NO.948

RAIL PLANS/ ELEVATIONS

PROJECT DESIGNATION	
68979/BR-0003(144)	
STATE	YEAR
ALASKA	2010
SHEET NUMBER	TOTAL SHEETS
N5.3	58

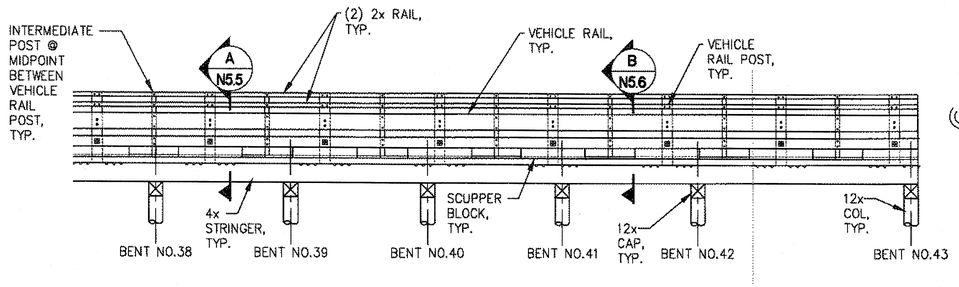

SEE SHEET N5.8 FOR APPROACH RAIL ELEVATIONS

A NORTH RAIL ELEVATION
BENT NO. 38 TO BENT NO. 43

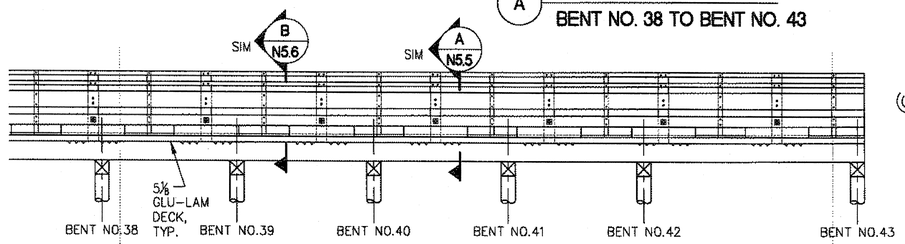

SEE SHEET N5.8 FOR APPROACH RAIL ELEVATIONS

B SOUTH RAIL ELEVATION
BENT NO. 38 TO BENT NO. 43

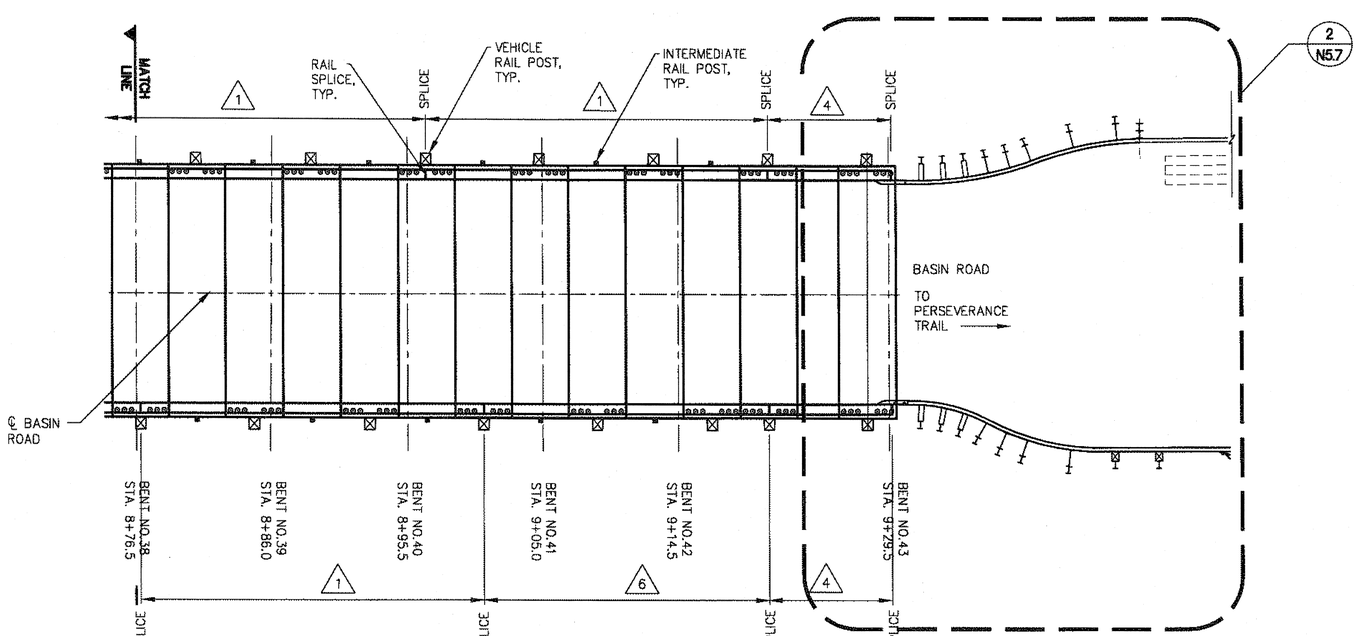

NOTES:

1. SHIM VEHICLE RAIL AND CURB RAIL AT VEHICLE RAIL POST AS REQUIRED, SEE RAIL SPLICE SCHEDULE FOR SPLICE LENGTHS.
2. ⚠# INDICATES RAIL MARK LENGTH, SEE N5.4 FOR RAIL SCHEDULE.

C RAIL PLAN
BENT NO. 38 TO BENT NO. 43

SCALE IN FEET
0 5 10 FT.

SPLICE SCHEDULE	
MARK	LENGTH (LF)
⚠1	24'-0"
⚠2	16'-0"
⚠3	8'-0"
⚠4	8'-7"
⚠5	24'-10"
⚠6	20'-0"

DO NOT SCALE FROM THESE DRAWINGS USE DIMENSIONS

JSK 68/83

PATH: N:\09XXX\092025 BASIN ROAD TRESTLE\D-DRAWINGS\PND\FINAL DESIGN\DEMO_DECK_RAIL PLAN.DWG
KATHERINE LUNDQUIST
TAB: N5.4 Monday, January 24, 2011 3:27:54 PM

ADDENDUM NUMBER		
ATTACHMENT NUMBER		
RECORD OF REVISIONS		
No.	DATE	DESCRIPTION

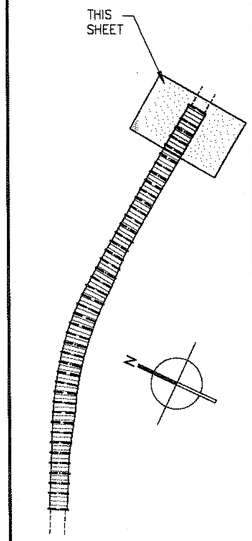

PLAN LEGEND

CHECKED BY: CMG



PLANS PREPARED BY PND ENGINEERS, INC.

DESIGNED BY: MDS

DRAWN BY: PJD

STATE OF ALASKA
DEPARTMENT OF TRANSPORTATION & PUBLIC FACILITIES
SOUTHEAST REGION

JUNEAU BRIDGE REPAIR & UPGRADE
BASIN ROAD TRESTLE BRIDGE NO.948

RAIL PLANS/ ELEVATIONS

PROJECT DESIGNATION	
68979/BR-0003(144)	
STATE	YEAR
ALASKA	2010
SHEET NUMBER	TOTAL SHEETS
N5.4	58

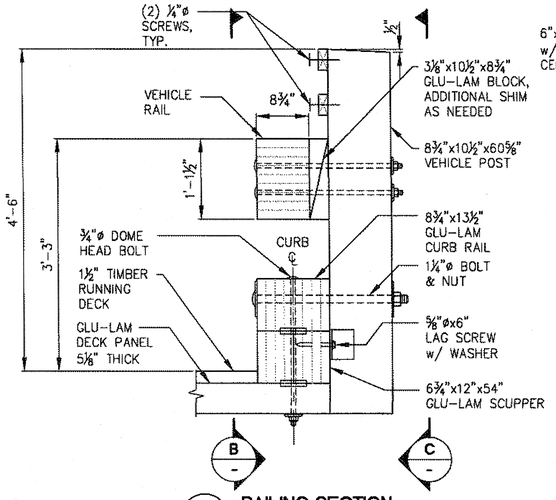

A RAILING SECTION AT VEHICLE RAIL

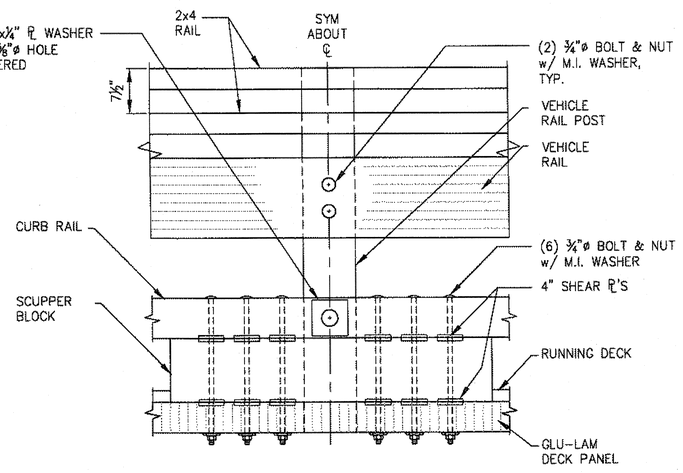

B INSIDE RAILING ELEVATION AT VEHICLE RAIL

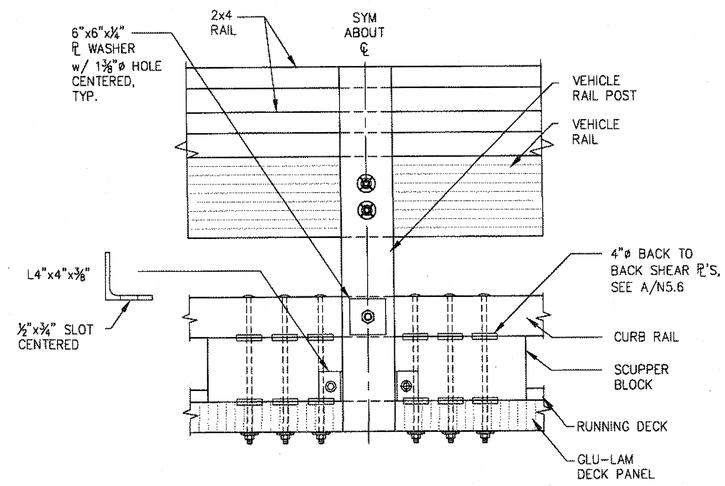

C OUTSIDE RAILING ELEVATION AT VEHICLE RAIL

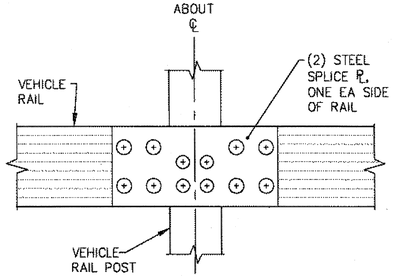

D RAILING SPLICE ELEVATION

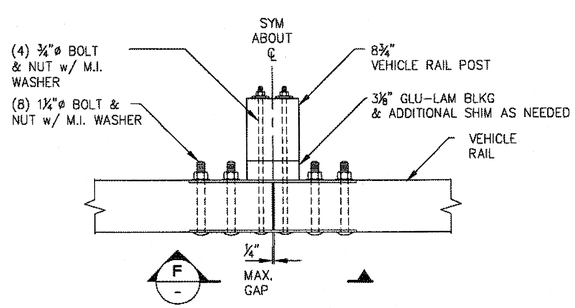

E RAILING SPLICE PLAN

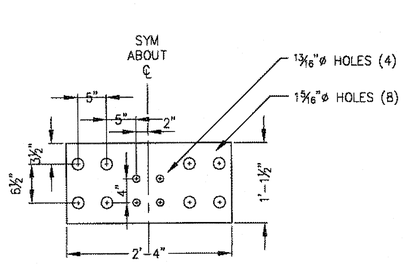

F RAILING SPLICE PLATE DETAIL

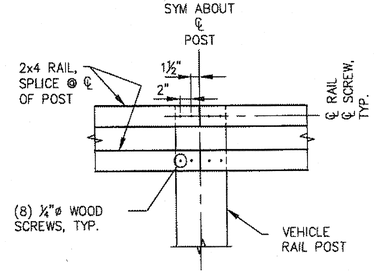

G 2x RAIL SPLICE DETAIL

NOTE:
SPLICE RAIL AS NEED ONLY @ VEHICLE RAIL POSTS.

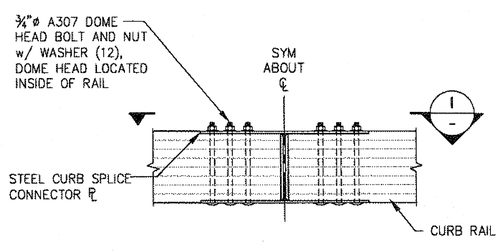

H CURB SPLICE PLAN

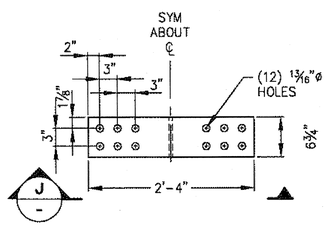

I CURB PLATE DETAIL

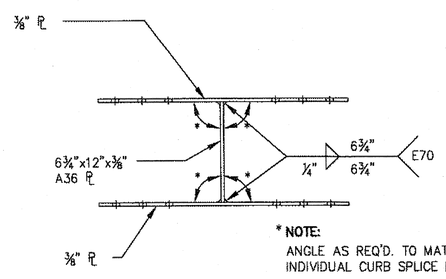

* NOTE:
ANGLE AS REQ'D. TO MATCH INDIVIDUAL CURB SPLICE MEMBERS.

J CURB PLATE CONNECTION DETAIL

JSK 60183

PLANS PREPARED BY PND ENGINEERS, INC.

DO NOT SCALE FROM THESE DRAWINGS USE DIMENSIONS

CHECKED BY: CMG

STATE OF ALASKA
DEPARTMENT OF TRANSPORTATION & PUBLIC FACILITIES
SOUTHEAST REGION

JUNEAU BRIDGE REPAIR & UPGRADE
BASIN ROAD TRESTLE BRIDGE NO.948

RAIL SECTIONS & DETAILS

DESIGNED BY: MDS
DRAWN BY: PJD

PATH: N:\09XXX\092025 BASIN ROAD TRESTLE\D- DRAWINGS\PND\FINAL DESIGN\DEMO_DECK_RAIL PLAN.DWG
TAB: N5.5 Monday, January 24, 2011 3:28:04 PM KATHERINE LUNDQUIST

REVISIONS NO.	DATE	DESCRIPTION	PROJECT DESIGNATION	YEAR	SHEET NO.	TOTAL SHEETS
			68979/BR-0003(144)	2010	N5.5	58

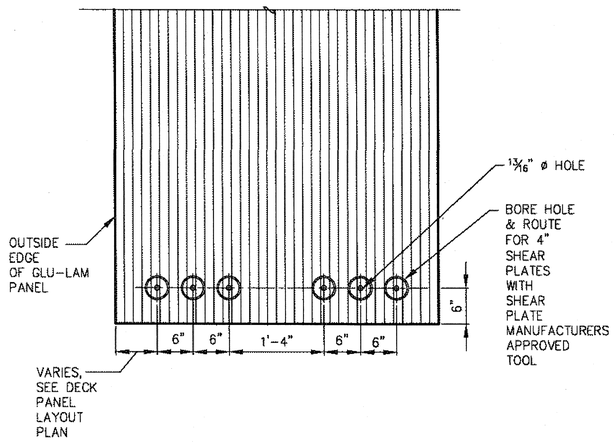

A THROUGH DECK BOLT DETAIL

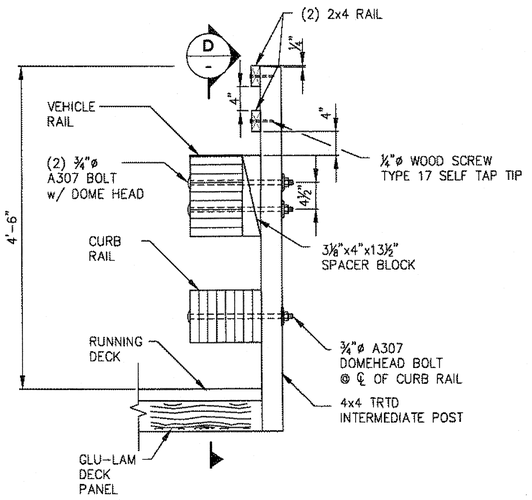

B TYPICAL INTERMEDIATE RAIL POST SECTION
NTS

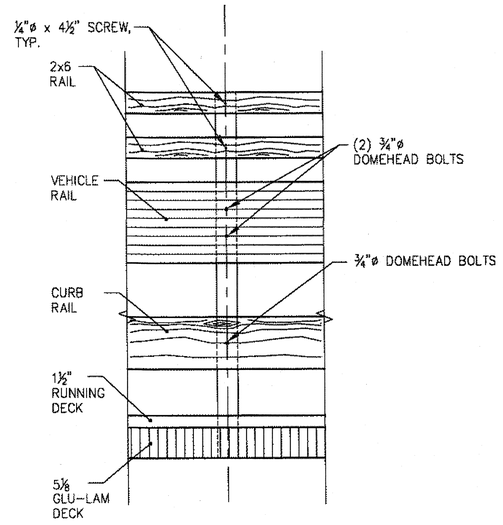

C TYPICAL INTERMEDIATE RAIL POST ELEVATION
NTS

DO NOT SCALE FROM THESE DRAWINGS USE DIMENSIONS

JSK
70/83
PLANS PREPARED BY
PND ENGINEERS, INC.

CHECKED BY: CMG

STATE OF ALASKA
DEPARTMENT OF TRANSPORTATION
& PUBLIC FACILITIES
SOUTHEAST REGION

JUNEAU BRIDGE REPAIR
& UPGRADE
BASIN ROAD TRESTLE BRIDGE
NO.948

RAIL SECTIONS & DETAILS

DESIGNED BY: MDS
DRAWN BY: PJD

PATH: N:\09XXX\092025 BASIN ROAD TRESTLE\D- DRAWINGS\PND\FINAL DESIGN\DEMO_DECK_RAIL PLAN.DWG
TAB: N5.6 Monday, January 24, 2011 3:28:14 PM KATHERINE LUNDQUIST

REVISIONS NO.	DATE	DESCRIPTION	PROJECT DESIGNATION	YEAR	SHEET NO.	TOTAL SHEETS
			68979/BR-0003(144)	2010	N5.6	58

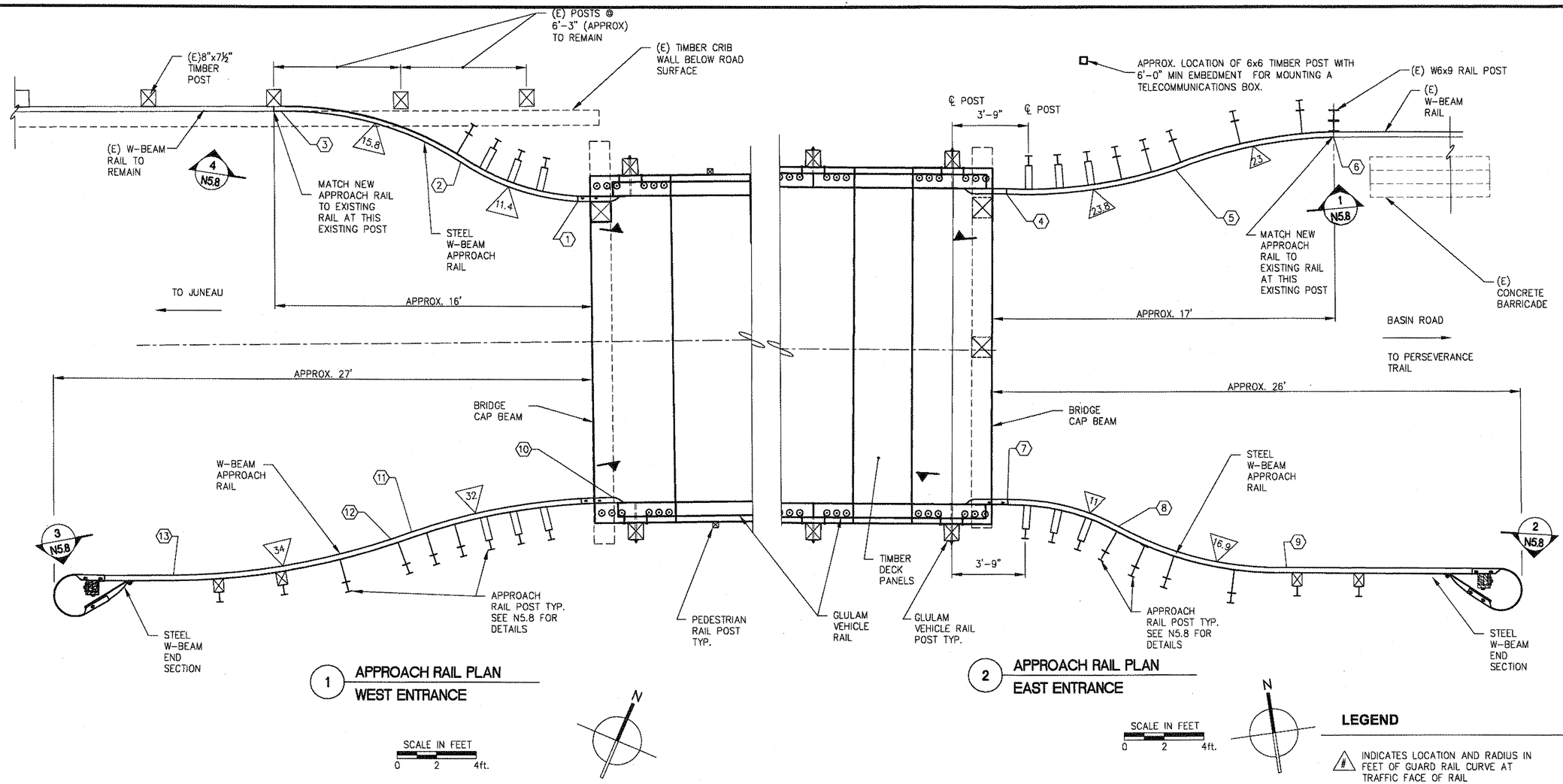

1 APPROACH RAIL PLAN
WEST ENTRANCE

2 APPROACH RAIL PLAN
EAST ENTRANCE

APPROACH RAIL LAYOUT TABLE

POINT	NORTHING	EASTING	DESCRIPTION
⟨1⟩	29.2	30.0	PC
⟨2⟩	28.9	23.9	PRC
⟨3⟩	28.1	14.7	PT
⟨4⟩	59.3	432.0	PC
⟨5⟩	59.6	440.5	PRC
⟨6⟩	60.3	448.6	PT
⟨7⟩	44.2	430.40	PC
⟨8⟩	42.3	435.7	PRC
⟨9⟩	39.3	443.8	PT
⟨10⟩	16.08	36.82	PC
⟨11⟩	10.91	28.04	PT
⟨12⟩	10.21	27.19	PT
⟨13⟩	4.67	17.74	PC

NOTES:
1. NORTHING AND EASTING POINTS ARE BASED ON A LOCAL COORDINATE SYSTEM. SEE SHEET NO.1 FOR CONTROL POINTS.
2. BRIDGE STRINGERS NOT SHOWN FOR CLARITY.
3. SEE STD DRAWING G30.00 FOR DETAILS AND SPACINGS NOT CALLED OUT.
4. RAIL POSTS WILL NEED TO BE PLACED IN ROCK FILL OR BEDROCK.

LEGEND

△# INDICATES LOCATION AND RADIUS IN FEET OF GUARD RAIL CURVE AT TRAFFIC FACE OF RAIL

⟨#⟩ INDICATES NORTHING AND EASTING OF POINT ALONG THE GUARD RAIL AT TRAFFIC FACE OF RAIL

DO NOT SCALE FROM THESE DRAWINGS USE DIMENSIONS

JSK 7/1/83
PLANS PREPARED BY PND ENGINEERS, INC.

CHECKED BY: CMG
DESIGNED BY: MDS
DRAWN BY: PJD

STATE OF ALASKA
DEPARTMENT OF TRANSPORTATION & PUBLIC FACILITIES
SOUTHEAST REGION

JUNEAU BRIDGE REPAIR & UPGRADE BASIN ROAD TRESTLE BRIDGE NO.948

RAIL SECTIONS & DETAILS

PATH: N:\09XXX\092025 BASIN ROAD TRESTLE\D- DRAWINGS\PND\FINAL DESIGN\DEMO_DECK_RAIL PLAN.DWG
TAB: N5.7 Monday, January 24, 2011 3:28:24 PM KATHERINE LUNDQUIST

REVISIONS NO.	DATE	DESCRIPTION	PROJECT DESIGNATION	YEAR	SHEET NO.	TOTAL SHEETS
			68979/BR-0003(144)	2010	N5.7	58

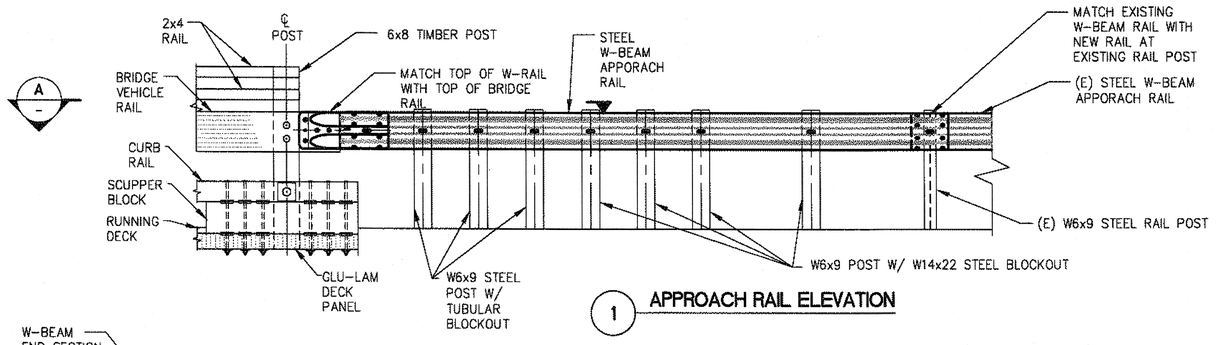

1 APPROACH RAIL ELEVATION

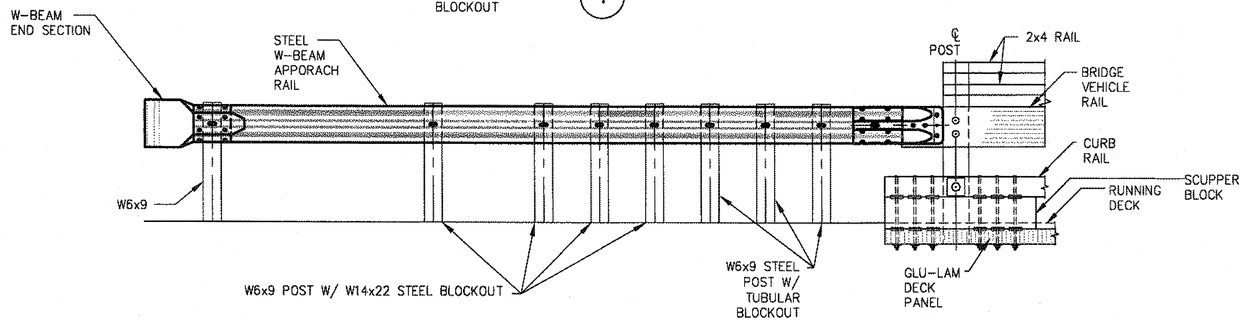

2 APPROACH RAIL ELEVATION

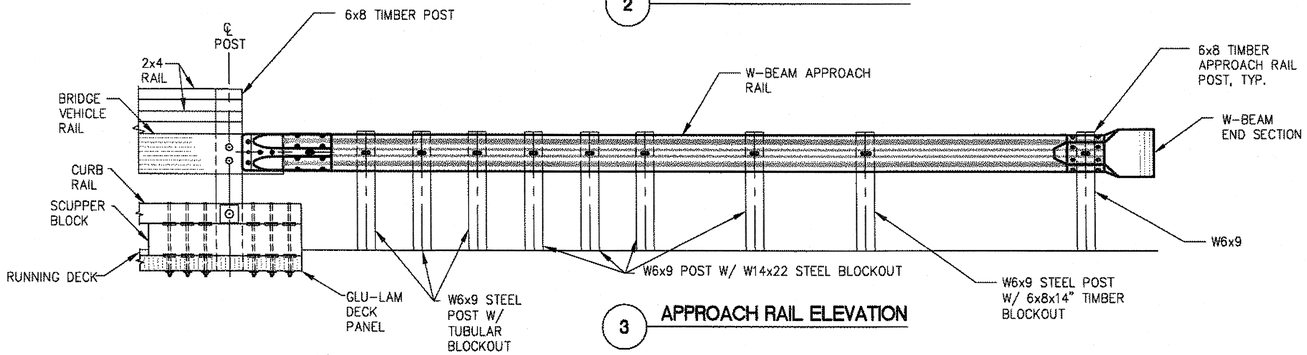

3 APPROACH RAIL ELEVATION

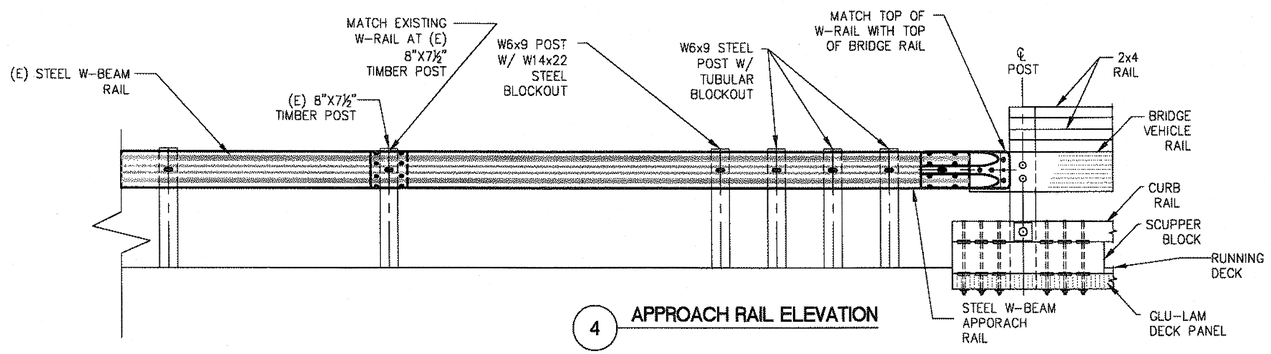

4 APPROACH RAIL ELEVATION

NOTE:
SEE TYPICAL ALASKA DOT STANDARD DETAILS G-30.00 FOR DETAILS NOT CALLED OUT

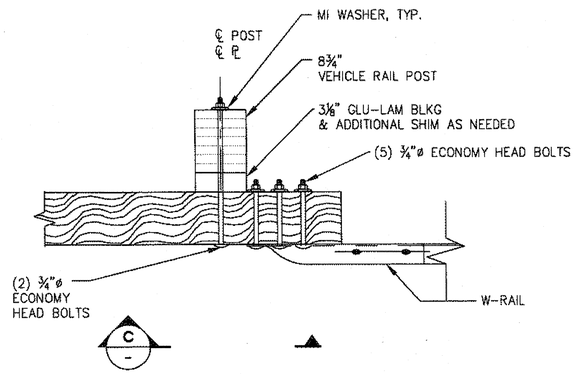

C

A TERMINAL BRIDGE RAIL CONNECTION PLAN
NTS

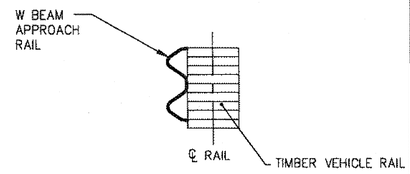

B

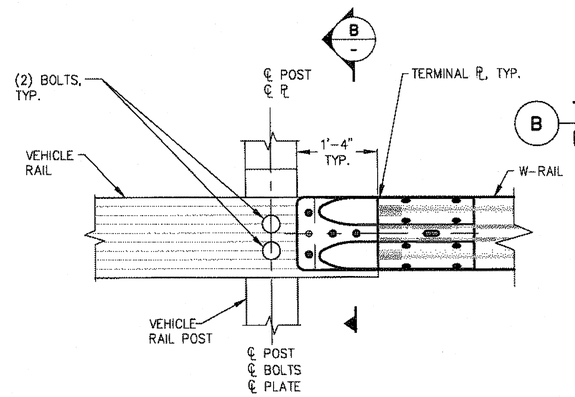

B TERMINAL PLATE SECTION
NTS

C TERMINAL BRIDGE RAIL ELEVATION
NTS

DO NOT SCALE FROM THESE DRAWINGS USE DIMENSIONS

JSK 12/83

PLANS PREPARED BY PND ENGINEERS, INC.

CHECKED BY:	CMG
DESIGNED BY:	MDS
DRAWN BY:	PJD

STATE OF ALASKA
DEPARTMENT OF TRANSPORTATION & PUBLIC FACILITIES
SOUTHEAST REGION

JUNEAU BRIDGE REPAIR & UPGRADE BASIN ROAD TRESTLE BRIDGE NO.948

RAIL ELEVATIONS

PATH: N:\09XXX\092025 BASIN ROAD TRESTLE\D- DRAWINGS\PND\FINAL DESIGN\DEMO_DECK_RAIL PLAN.DWG
TAB: N5.8 Monday, January 24, 2011 3:28:34 PM KATHERINE LUNDQUIST

REVISIONS NO.	DATE	DESCRIPTION	PROJECT DESIGNATION	YEAR	SHEET NO.	TOTAL SHEETS
			68979/BR-0003(144)	2010	N5.8	58

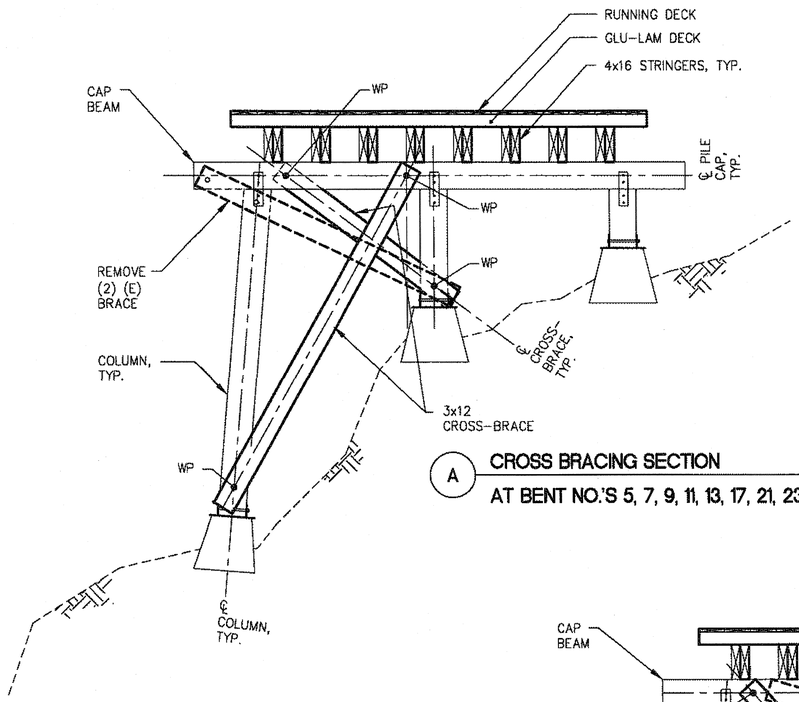

A CROSS BRACING SECTION
AT BENT NO.'S 5, 7, 9, 11, 13, 17, 21, 23, 24, 25, 27, 29, 31, 33, 37

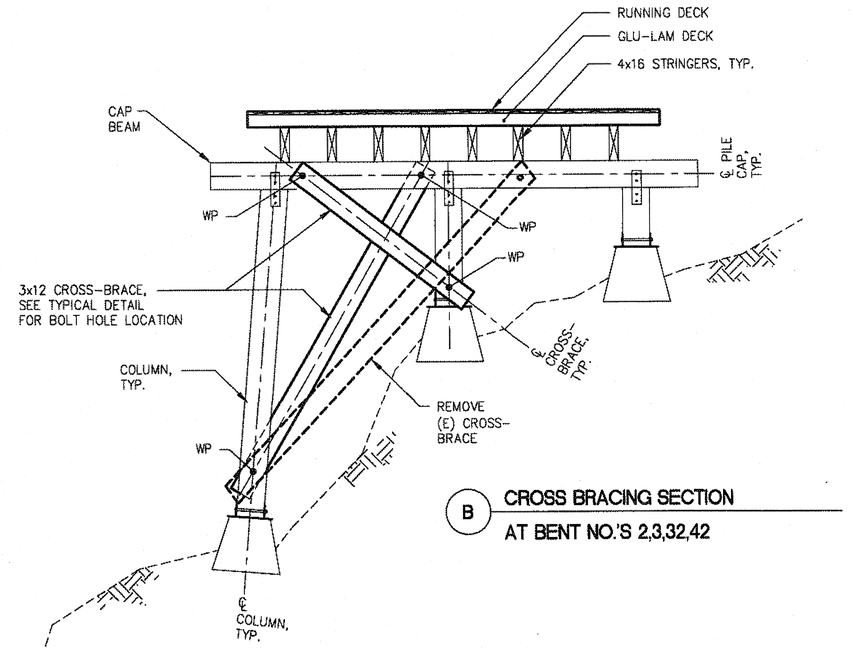

B CROSS BRACING SECTION
AT BENT NO.'S 2,3,32,42

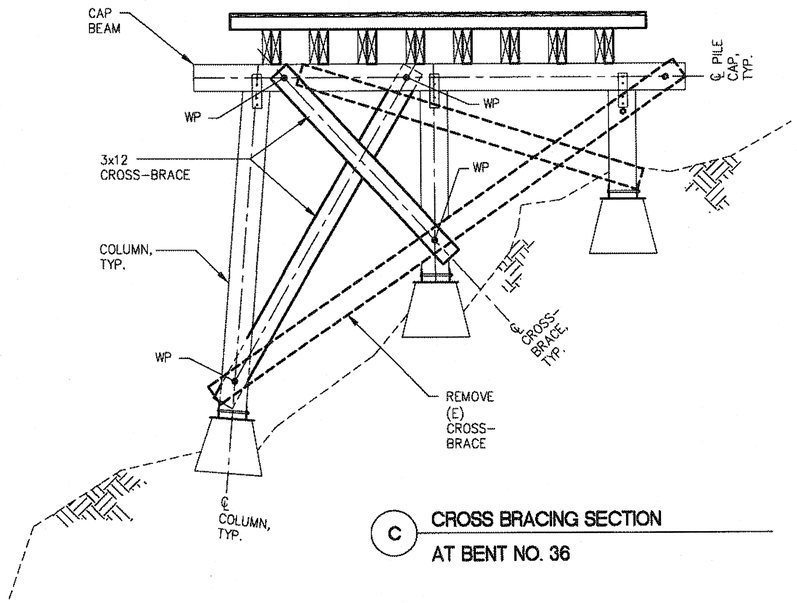

C CROSS BRACING SECTION
AT BENT NO. 36

NOTES:

1. BRIDGE RAILING NOT SHOWN FOR CLARITY.
2. FOR WP LOCATIONS SEE SHEET N6.5.

JSK
73/83

PLANS PREPARED BY
PND ENGINEERS, INC.

DO NOT SCALE FROM THESE DRAWINGS USE DIMENSIONS

CHECKED BY: CMG	STATE OF ALASKA DEPARTMENT OF TRANSPORTATION & PUBLIC FACILITIES SOUTHEAST REGION
DESIGNED BY: MDS	JUNEAU BRIDGE REPAIR & UPGRADE BASIN ROAD TRESTLE BRIDGE NO.948
DRAWN BY: PJD	**CROSS-BRACING**

STATE OF ALASKA — REGISTERED PROFESSIONAL ENGINEER — Christopher Glanville — Jan 24, 2011 — CE-7559

PATH: N:\09XXX\092025 BASIN ROAD TRESTLE\D- DRAWINGS\PND\FINAL DESIGN\N6.1.DWG
TAB: N6.1 Monday, January 24, 2011 3:33:52 PM KATHERINE LUNDQUIST

REVISIONS			PROJECT DESIGNATION	YEAR	SHEET NO.	TOTAL SHEETS
NO.	DATE	DESCRIPTION	68979/BR-0003(144)	2010	N6.1	58

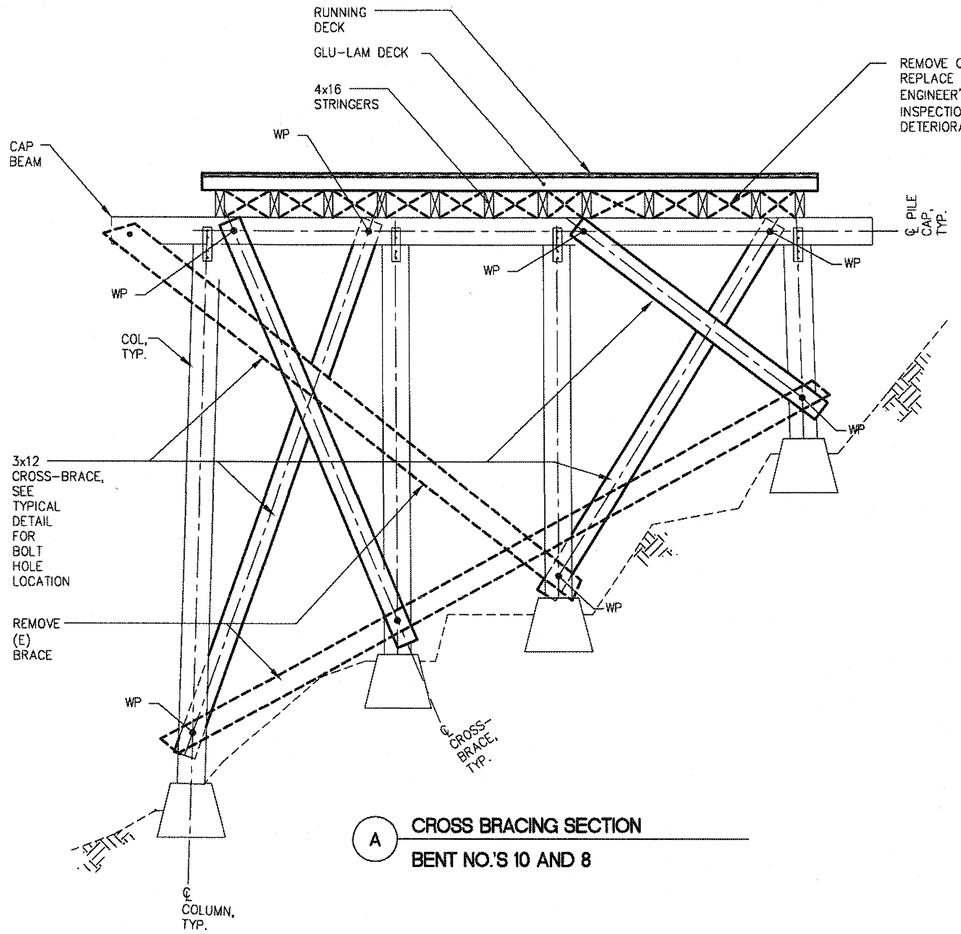

A CROSS BRACING SECTION
BENT NO.'S 10 AND 8

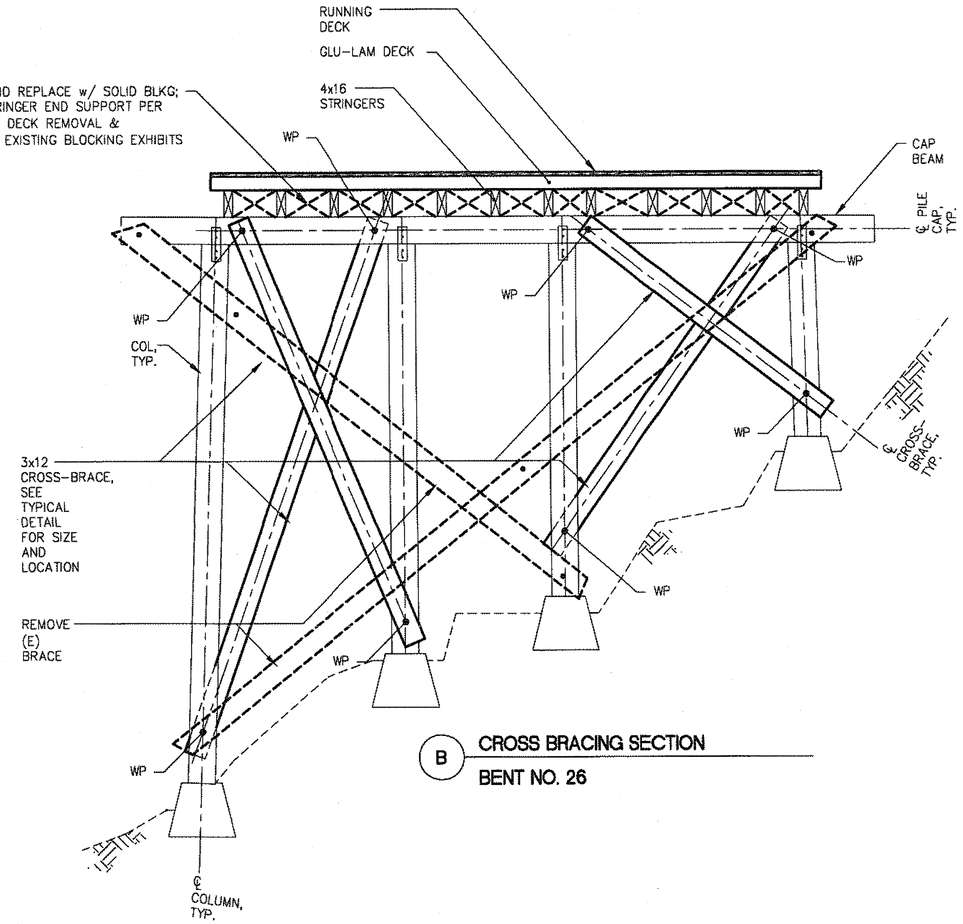

B CROSS BRACING SECTION
BENT NO. 26

NOTES:

1. BRIDGE RAILING NOT SHOWN FOR CLARITY.
2. FOR WP LOCATIONS SEE SHEET N6.5.

DO NOT SCALE FROM THESE DRAWINGS USE DIMENSIONS

JSK
74/83
PLANS PREPARED BY
PND ENGINEERS, INC.

CHECKED BY:	CMG
DESIGNED BY:	MDS
DRAWN BY:	PJD

STATE OF ALASKA
DEPARTMENT OF TRANSPORTATION
& PUBLIC FACILITIES
SOUTHEAST REGION

JUNEAU BRIDGE REPAIR & UPGRADE BASIN ROAD TRESTLE BRIDGE NO.948

CROSS-BRACING

PATH: N:\09XXX\092025 BASIN ROAD TRESTLE\D- DRAWINGS\PND\FINAL DESIGN\N6.1.DWG
TAB: N6.2 Monday, January 24, 2011 3:34:00 PM KATHERINE LUNDQUIST

REVISIONS NO.	DATE	DESCRIPTION	PROJECT DESIGNATION	YEAR	SHEET NO.	TOTAL SHEETS
			68979/BR-0003(144)	2010	N6.2	58

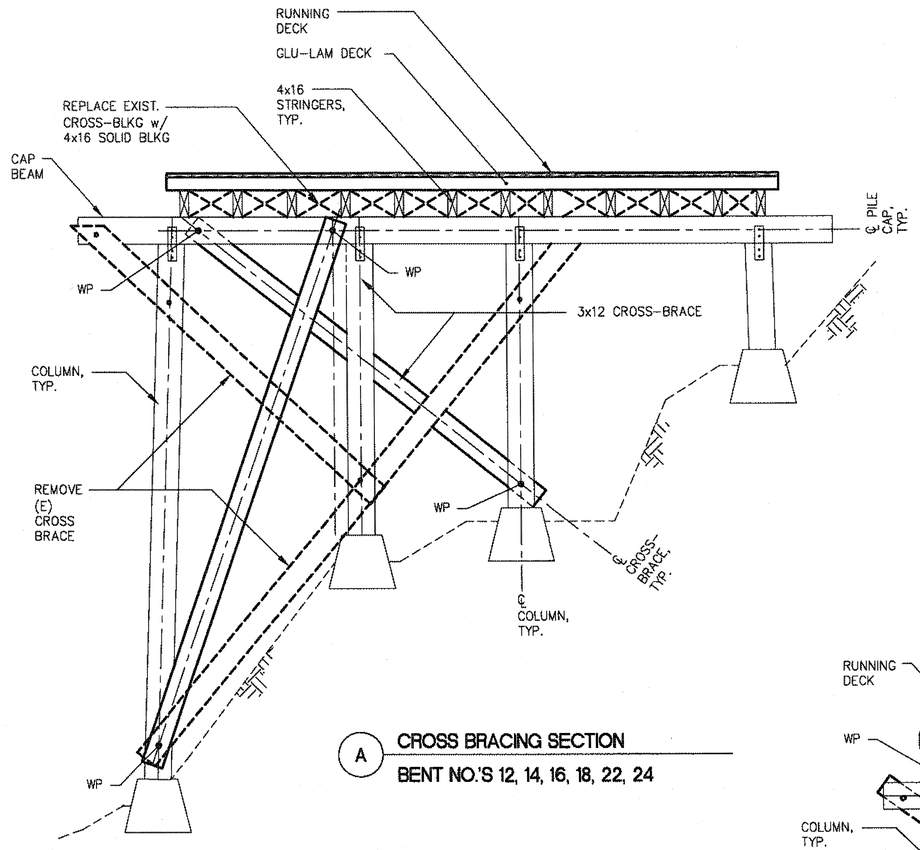

A CROSS BRACING SECTION

BENT NO.'S 12, 14, 16, 18, 22, 24

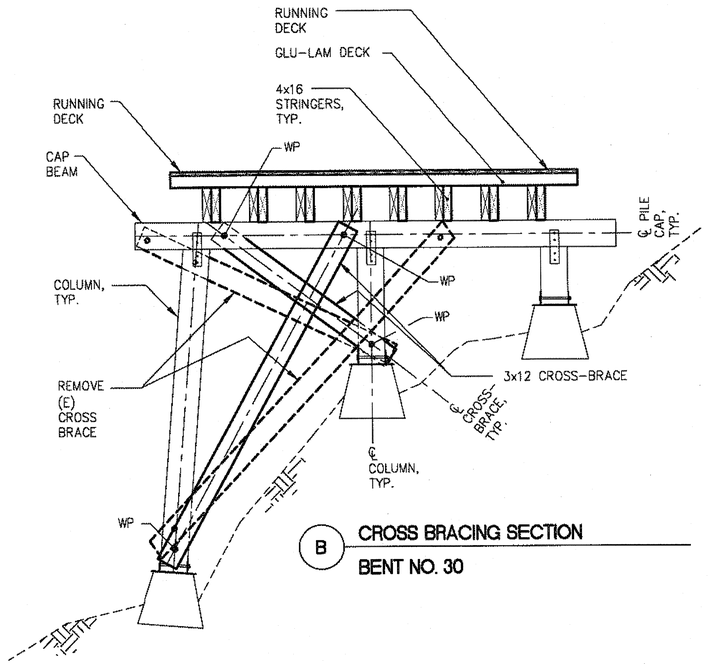

B CROSS BRACING SECTION

BENT NO. 30

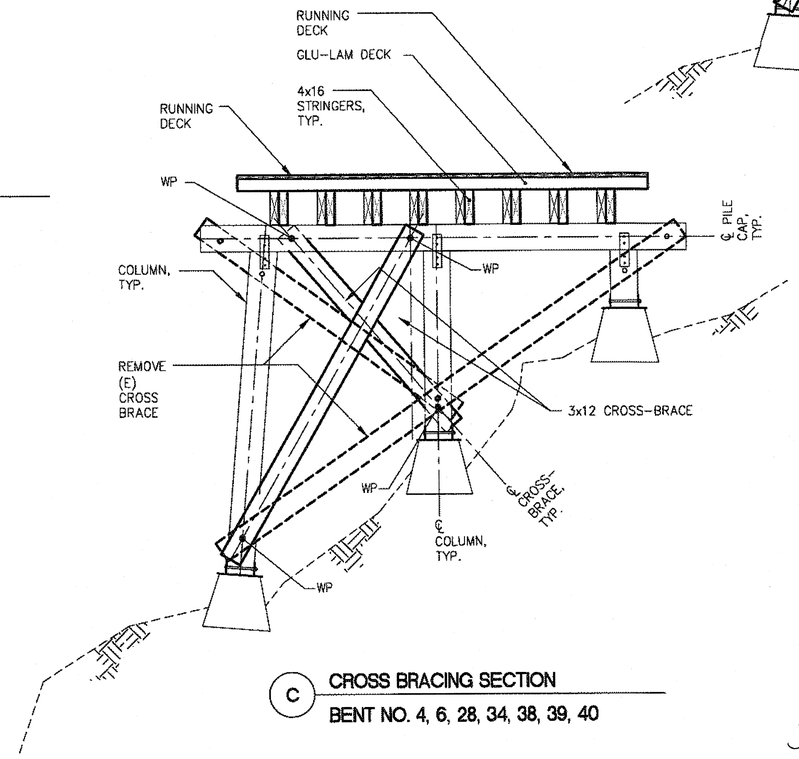

C CROSS BRACING SECTION

BENT NO. 4, 6, 28, 34, 38, 39, 40

NOTES:

1. BRIDGE RAILING NOT SHOWN FOR CLARITY.
2. FOR WP LOCATIONS SEE SHEET N6.5.

DO NOT SCALE FROM THESE DRAWINGS USE DIMENSIONS

JSK
75/83

PLANS PREPARED BY
PND ENGINEERS, INC.

CHECKED BY: CMG

STATE OF ALASKA
Christopher Gonette
Jan 24, 2011
CE-7559
CERTIFIED PROFESSIONAL ENGINEER

DESIGNED BY: MDS
DRAWN BY: PJD

STATE OF ALASKA
DEPARTMENT OF TRANSPORTATION
& PUBLIC FACILITIES
SOUTHEAST REGION

JUNEAU BRIDGE REPAIR & UPGRADE
BASIN ROAD TRESTLE BRIDGE NO.948

CROSS-BRACING

PATH: N:\09XXX\092025 BASIN ROAD TRESTLE\D- DRAWINGS\PND\FINAL DESIGN\N6.1.DWG
TAB: N6.3 Monday, January 24, 2011 3:34:10 PM KATHERINE LUNDQUIST

REVISIONS			PROJECT DESIGNATION	YEAR	SHEET NO.	TOTAL SHEETS
NO.	DATE	DESCRIPTION				
			68979/BR-0003(144)	2010	N6.3	58

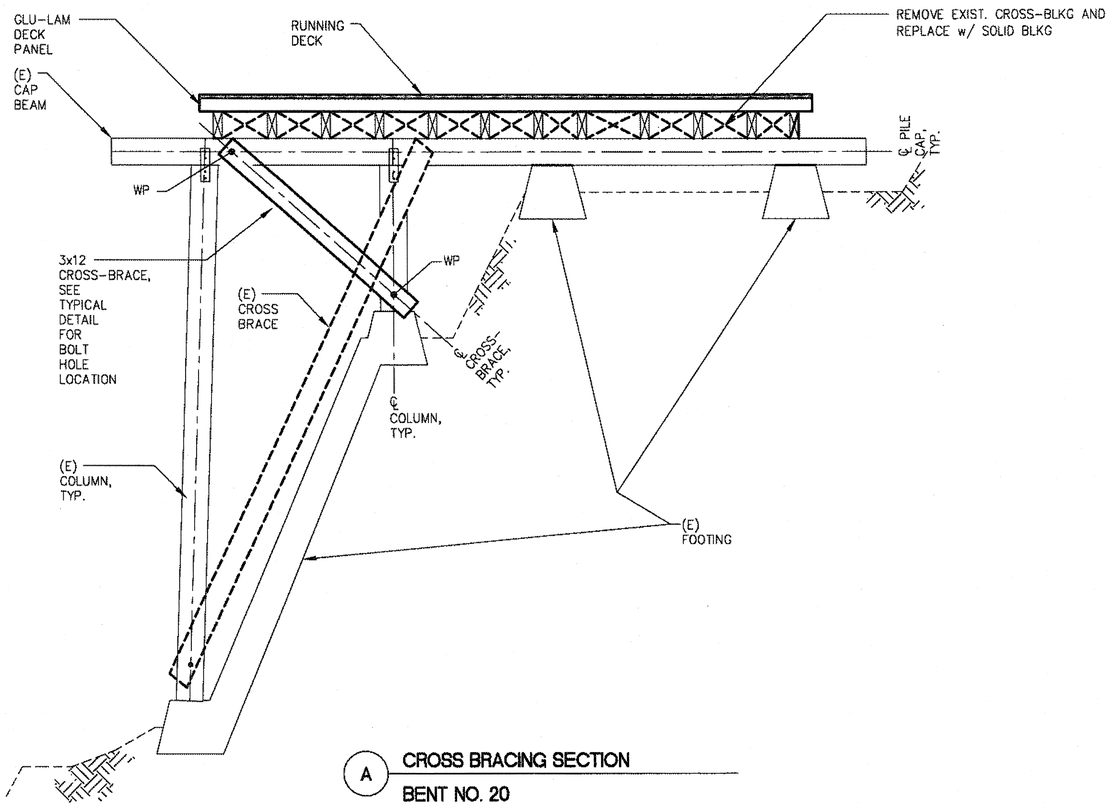

A CROSS BRACING SECTION
BENT NO. 20

NOTES:

1. BRIDGE RAILING NOT SHOWN FOR CLARITY.
2. FOR WP LOCATIONS SEE SHEET N6.5.

DO NOT SCALE FROM THESE DRAWINGS USE DIMENSIONS

JSK
7/6/83

PLANS PREPARED BY
PND ENGINEERS, INC.

CHECKED BY:	CMG
DESIGNED BY:	MDS
DRAWN BY:	PJD

STATE OF ALASKA
DEPARTMENT OF TRANSPORTATION
& PUBLIC FACILITIES
SOUTHEAST REGION

JUNEAU BRIDGE REPAIR & UPGRADE
BASIN ROAD TRESTLE BRIDGE NO.948
CROSS-BRACING

PATH: N:\09XXX\092025 BASIN ROAD TRESTLE\D- DRAWINGS\PND\FINAL DESIGN\N6.1.DWG
TAB: N6.4 Monday, January 24, 2011 3:34:20 PM KATHERINE LUNDQUIST

REVISIONS			PROJECT DESIGNATION	YEAR	SHEET NO.	TOTAL SHEETS
NO.	DATE	DESCRIPTION				
			68979/BR-0003(144)	2010	N6.4	58

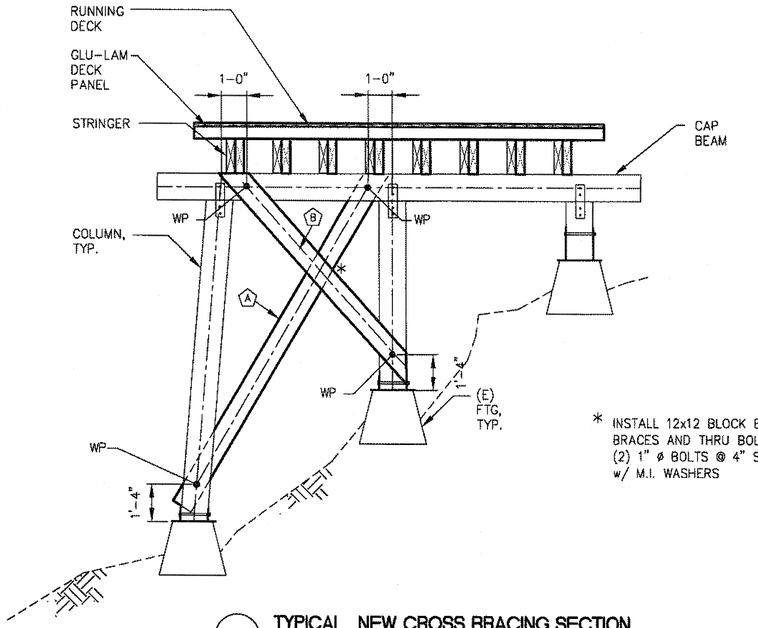

A TYPICAL NEW CROSS BRACING SECTION AT THREE COLUMN BENTS

* INSTALL 12x12 BLOCK BTWN BRACES AND THRU BOLT w/ (2) 1" ø BOLTS @ 4" SPACING w/ M.I. WASHERS

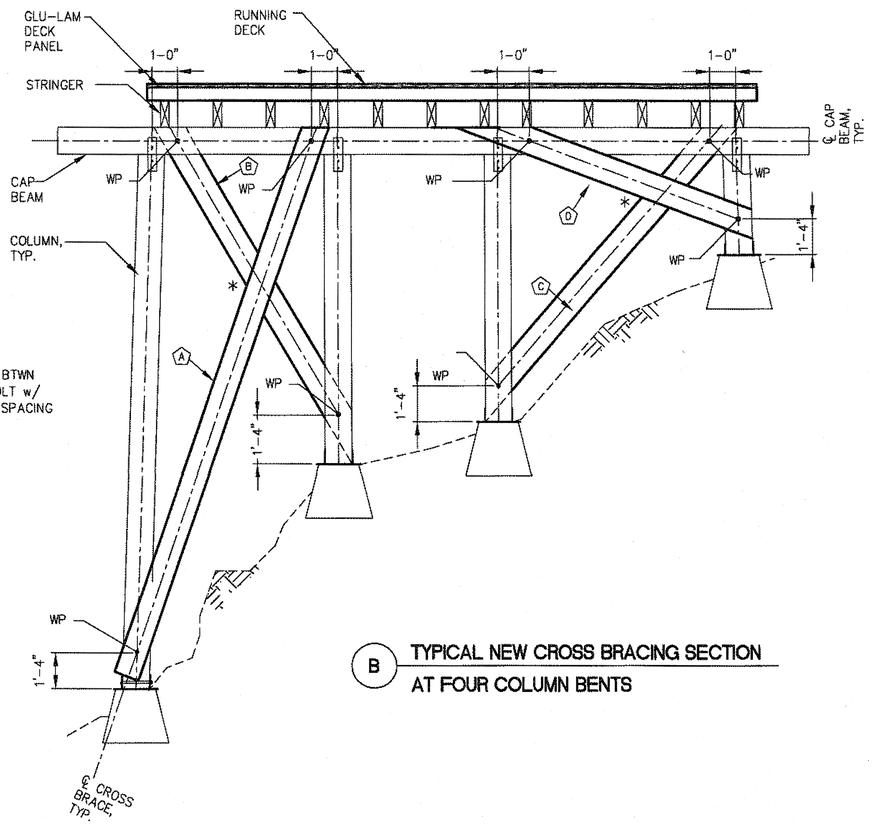

B TYPICAL NEW CROSS BRACING SECTION AT FOUR COLUMN BENTS

CROSS-BRACING LENGTH TABLE					
BENT	TYPE	CROSS-BRACING LENGTH			
		A	B	C	D
1	1				
2	1	115	93		
3	1	145	110		
4	1	219	107		
5	1	199	135		
6	1	224	134		
7	1	254	171		
8	2	244	182	139	90
9	1	274	173		
10	2	214	127	101	78
11	1	271	143		
12	2	235	128		
13	1	223	133		
14	2	171	99		
15	1	171	114		
16	2	129	87		
17	1	217	133		
18	2	219	114		
19	1	205	119		
20	2	138	85		
21	1	177	123		
22	2	238	132	89	77
23	1	309	158		
24	2	283	91		
25	1	298	156		
26	2	258	150	126	72
27	1	217	124		
28	1	175	114		
29	1	232	132		
30	1	195	97		
31	1	226	131		
32	1	168	83		
33	1	203	118		
34	1	195	105		
35	1	238	111		
36	1	214	157		
37	1	264	175		
38	1	238	156		
39	1	204	77		
40	1	191	116		
41	1	138	73		
42	1	103	86		
43	1				

NOTE:
SPLICE CROSS-BRACE MEMBERS AS REQ'D., SEE SPLICE DETAIL B/N6.6

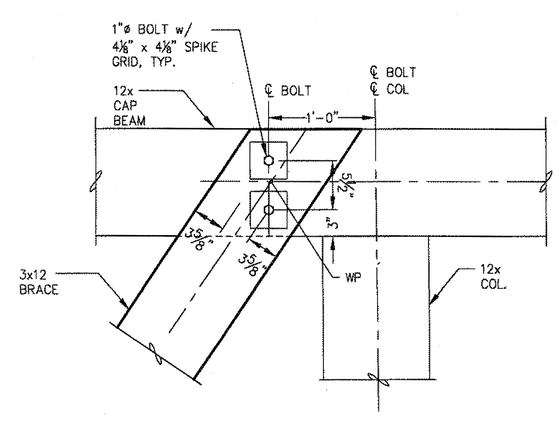

C TYPICAL CROSS BRACE CONNECTION TO CAP BEAM

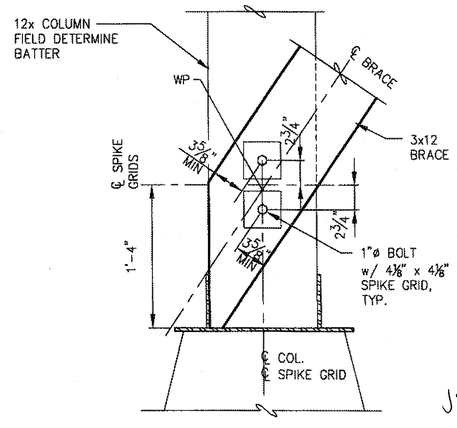

D TYPICAL BRACE TO COLUMN CONNECTION AT FOOTING

NOTES:

1. BRIDGE RAILING NOT SHOWN FOR CLARITY.
2. (#) DENOTES CROSS-BRACING SCHEDULE.
3. SPLICE ALL CROSS-BRACES LONGER THAN 16'-0" AT THE CENTER OF BRACE, SEE SPLICE DETAIL N/S6.6.

JSK 7/7/83

PLANS PREPARED BY PND ENGINEERS, INC.

DO NOT SCALE FROM THESE DRAWINGS USE DIMENSIONS

CHECKED BY: CMG
DESIGNED BY: MDS
DRAWN BY: PJD

STATE OF ALASKA
DEPARTMENT OF TRANSPORTATION & PUBLIC FACILITIES
SOUTHEAST REGION

JUNEAU BRIDGE REPAIR & UPGRADE BASIN ROAD TRESTLE BRIDGE NO.948

CROSS-BRACING

PATH: N:\09XXX\092025 BASIN ROAD TRESTLE\D- DRAWINGS\PND\FINAL DESIGN\N6.1.DWG
TAB: N6.5 Monday, January 24, 2011 3:34:30 PM KATHERINE LUNDQUIST

REVISIONS			PROJECT DESIGNATION	YEAR	SHEET NO.	TOTAL SHEETS
NO.	DATE	DESCRIPTION				
			68979/BR-0003(144)	2010	N6.5	58

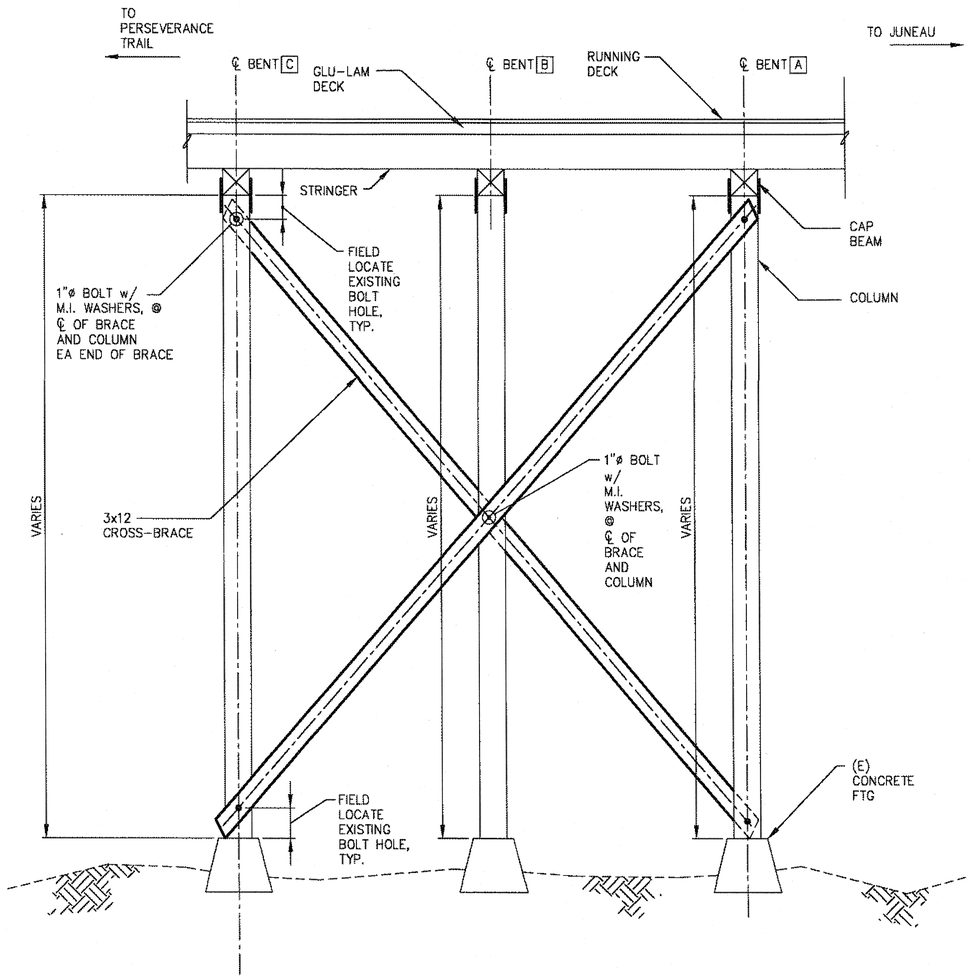

A TYPICAL LONGITUDINAL CROSS BRACE ELEVATION

NOTES:

1. SEE TABLE FOR BRACE LOCATIONS.
2. LONGITUDINAL BRACES ATTACH AT ENDS ONLY AND ARE LOCATED ON DOWNHILL SIDE OF BRIDGE.
3. SEE BRACING TABLE FOR LOCATION OF BENTS, AND FOR ACTUAL COLUMN LENGTH.

CROSS-BRACING LOCATION AND LENGTH SUMMARY

ELEVATION	BENT A		BENT B		BENT C	
	BENT No.	COLUMN LENGTH	BENT No.	COLUMN LENGTH	BENT No.	COLUMN LENGTH
A	10	209"	11	256"	12	232"
B	16	113"	17	163"	18	197"
C	22	235"	23	244"	24	282"
D	28	164"	29	222"	30	186"
E	34	186"	35	221"	36	207"
F	38	233"	39	214"	40	183"

NOTES:

1. THE ABOVE COLUMN LENGTHS CAN BE USED FOR AN APPROXIMATE BRACE LENGTH, ACTUAL BRACE LENGTH SHALL BE FIELD VERIFIED BY LOCATIONG EXISTING BRACING BOLTS ON COLUMNS.

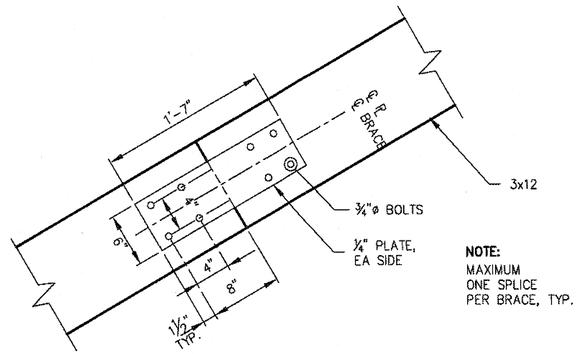

NOTE:
MAXIMUM ONE SPLICE PER BRACE, TYP.

B CROSS-BRACE SPLICE DETAIL

DO NOT SCALE FROM THESE DRAWINGS USE DIMENSIONS

CHECKED BY: CMG

STATE OF ALASKA
DEPARTMENT OF TRANSPORTATION & PUBLIC FACILITIES
SOUTHEAST REGION

JUNEAU BRIDGE REPAIR & UPGRADE
BASIN ROAD TRESTLE BRIDGE
NO.948

CROSS-BRACING

DESIGNED BY: MDS
DRAWN BY: PJD

PATH: N:\09XXX\092025 BASIN ROAD TRESTLE\D- DRAWINGS\PND\FINAL DESIGN\N6.1.DWG
TAB: N6.6 Monday, January 24, 2011 3:34:40 PM KATHERINE LUNDQUIST

REVISIONS			PROJECT DESIGNATION	YEAR	SHEET NO.	TOTAL SHEETS
NO.	DATE	DESCRIPTION	68979/BR-0003(144)	2010	N6.6	58

JSK 78/83

PLANS PREPARED BY PND ENGINEERS, INC.

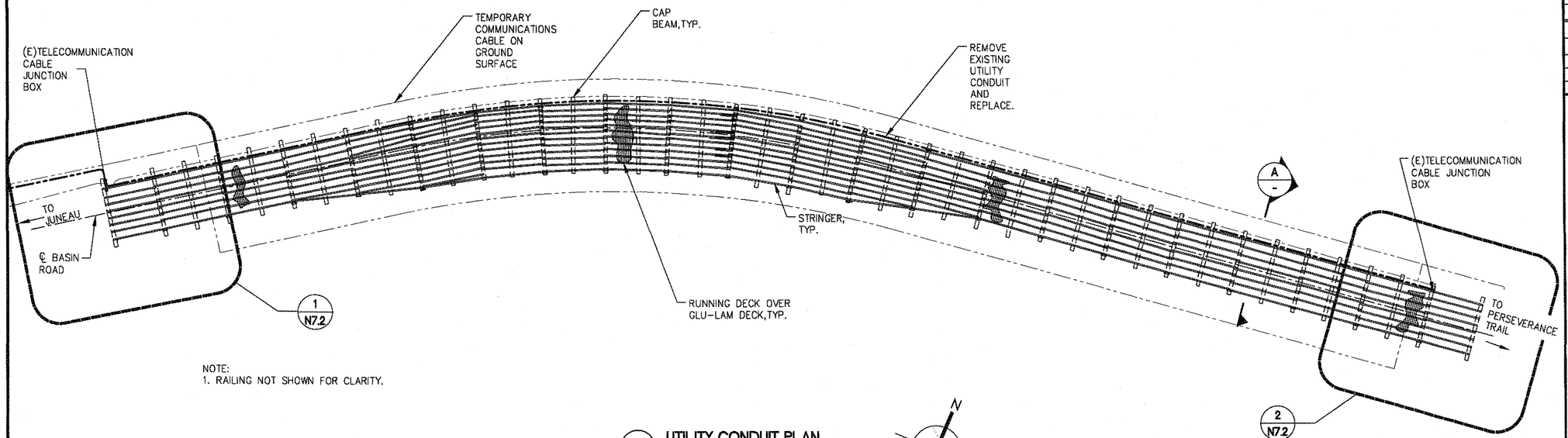

NOTE:
1. RAILING NOT SHOWN FOR CLARITY.

1 UTILITY CONDUIT PLAN

SCALE IN FEET
0 5 10 FT.

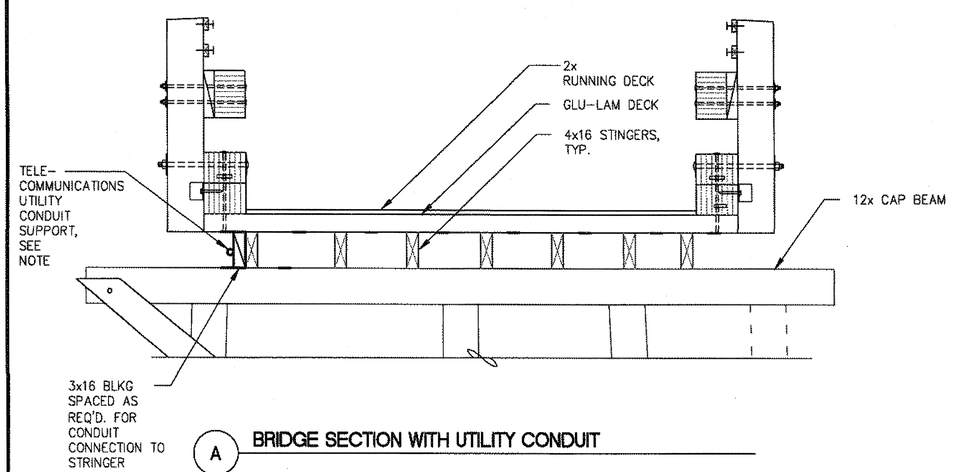

A BRIDGE SECTION WITH UTILITY CONDUIT

NOTES:
1. REMOVE EXISTING TELECOMMUNICATION CABLES AND CONDUITS.
2. CONNECTION OF TEMPORARY TELECOMMUNICATION LINE TO MAINTAIN SERVICE ACROSS BRIDGE DURING CONSTRUCTION.
3. SPLICE AND CONNECT TELECOMMUNICATION CONDUIT TO BRIDGE STRINGERS WITH GALVANIZED EMT ONE HOLE SNAP STRAP, 2" OR APPROVED EQUAL AT 5'-0" MAX. O.C.; SECURE STRAP TO STRINGER w/ (2) ⅜" x 2" GALVANIZED LAG SCREWS. CONDUIT SHALL BE 2"ø SCHEDULE 40 PVC MEETING ASTM 1785 AND D2665.
4. BRIDGE RAIL NOT SHOWN FOR CLARITY.

JSK 79/83

DO NOT SCALE FROM THESE DRAWINGS USE DIMENSIONS

PATH: N:\09XX\092025 BASIN ROAD TRESTLE\D-DRAWINGS\PND\FINAL DESIGN\BIND\N7.1.DWG
KATHERINE LUNDQUIST
TAB: N7.1 MONDAY, JANUARY 24, 2011

ADDENDUM NUMBER

ATTACHMENT NUMBER

RECORD OF REVISIONS

No.	DATE	DESCRIPTION

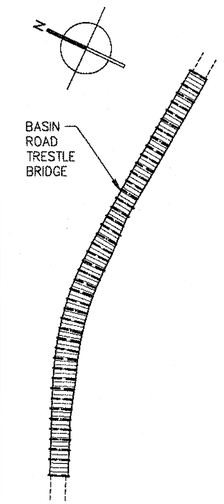

PLAN LEGEND

CHECKED BY: CMG

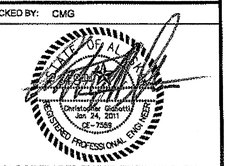

PLANS PREPARED BY PND ENGINEERS, INC.

DESIGNED BY: MDS
DRAWN BY: PJD

STATE OF ALASKA
DEPARTMENT OF TRANSPORTATION & PUBLIC FACILITIES
SOUTHEAST REGION

JUNEAU BRIDGE REPAIR & UPGRADE
BASIN ROAD TRESTLE BRIDGE NO.948

UTILITY PLAN AND DETAILS

PROJECT DESIGNATION	
68979/BR-0003(144)	
STATE	YEAR
ALASKA	2010
SHEET NUMBER	TOTAL SHEETS
N7.1	58

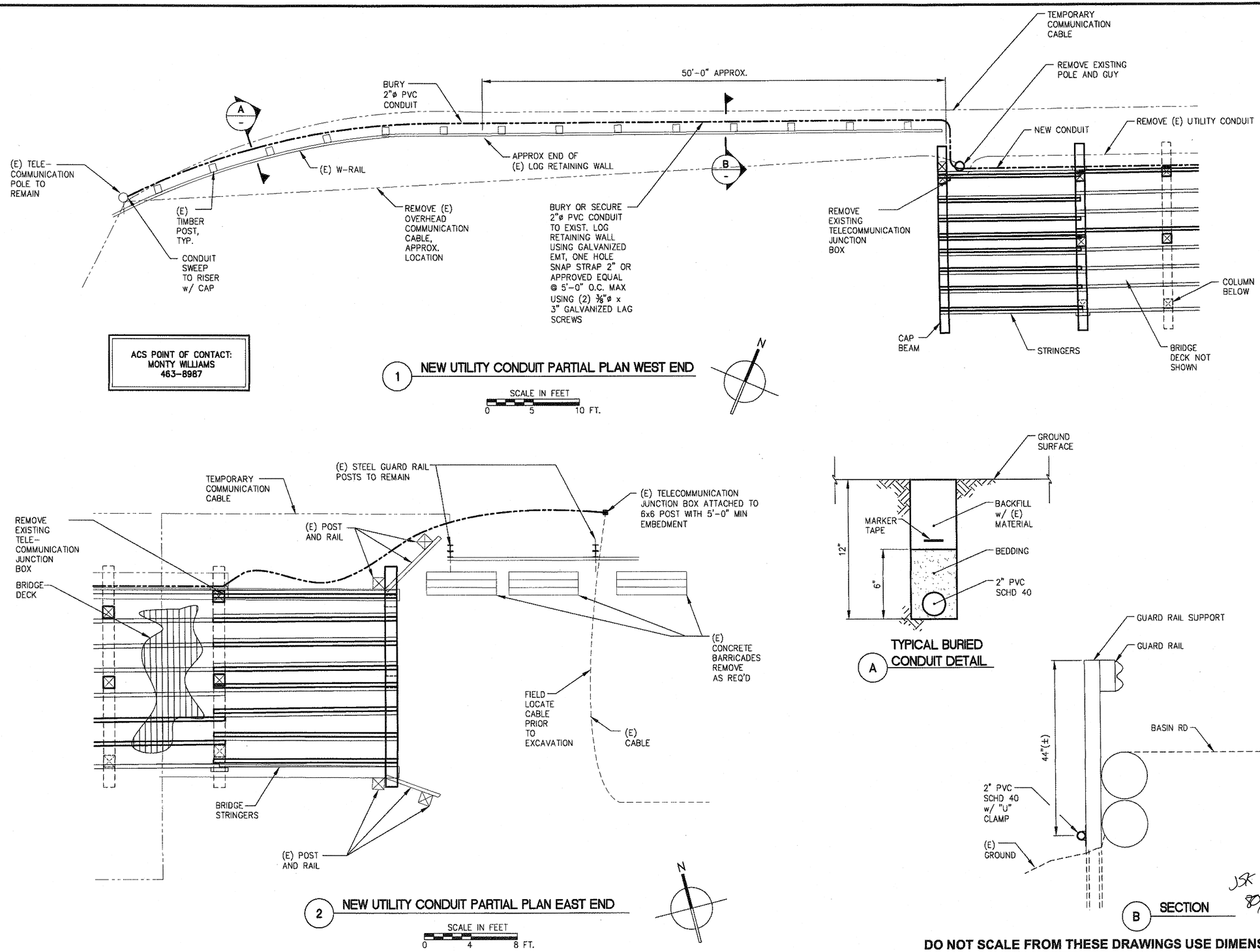

ACS POINT OF CONTACT:
MONTY WILLIAMS
463-8987

1 NEW UTILITY CONDUIT PARTIAL PLAN WEST END

2 NEW UTILITY CONDUIT PARTIAL PLAN EAST END

A TYPICAL BURIED CONDUIT DETAIL

B SECTION

JSK 80/83

DO NOT SCALE FROM THESE DRAWINGS USE DIMENSIONS

PATH: N:\09XXX\092025 BASIN ROAD TRESTLE\D-DRAWINGS\PND\FINAL DESIGN\BIND\N7.1.DWG
KATHERINE LUNDQUIST
TAB: N7.2 MONDAY, JANUARY 24, 2011

ADDENDUM NUMBER

ATTACHMENT NUMBER

RECORD OF REVISIONS

No.	DATE	DESCRIPTION

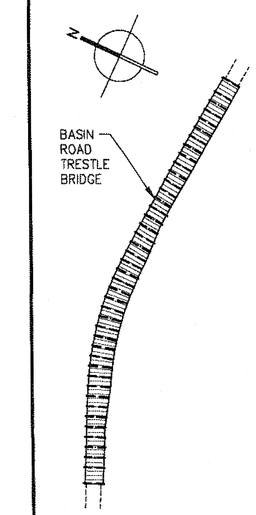

PLAN LEGEND

CHECKED BY: CMG

PLANS PREPARED BY PND ENGINEERS, INC.

DESIGNED BY: MDS

DRAWN BY: PJD

STATE OF ALASKA
DEPARTMENT OF TRANSPORTATION & PUBLIC FACILITIES
SOUTHEAST REGION

JUNEAU BRIDGE REPAIR & UPGRADE
BASIN ROAD TRESTLE BRIDGE NO.948

UTILITY PLAN AND DETAILS

PROJECT DESIGNATION
68979/BR-0003(144)

STATE	YEAR
ALASKA	2010
SHEET NUMBER	TOTAL SHEETS
N7.2	58

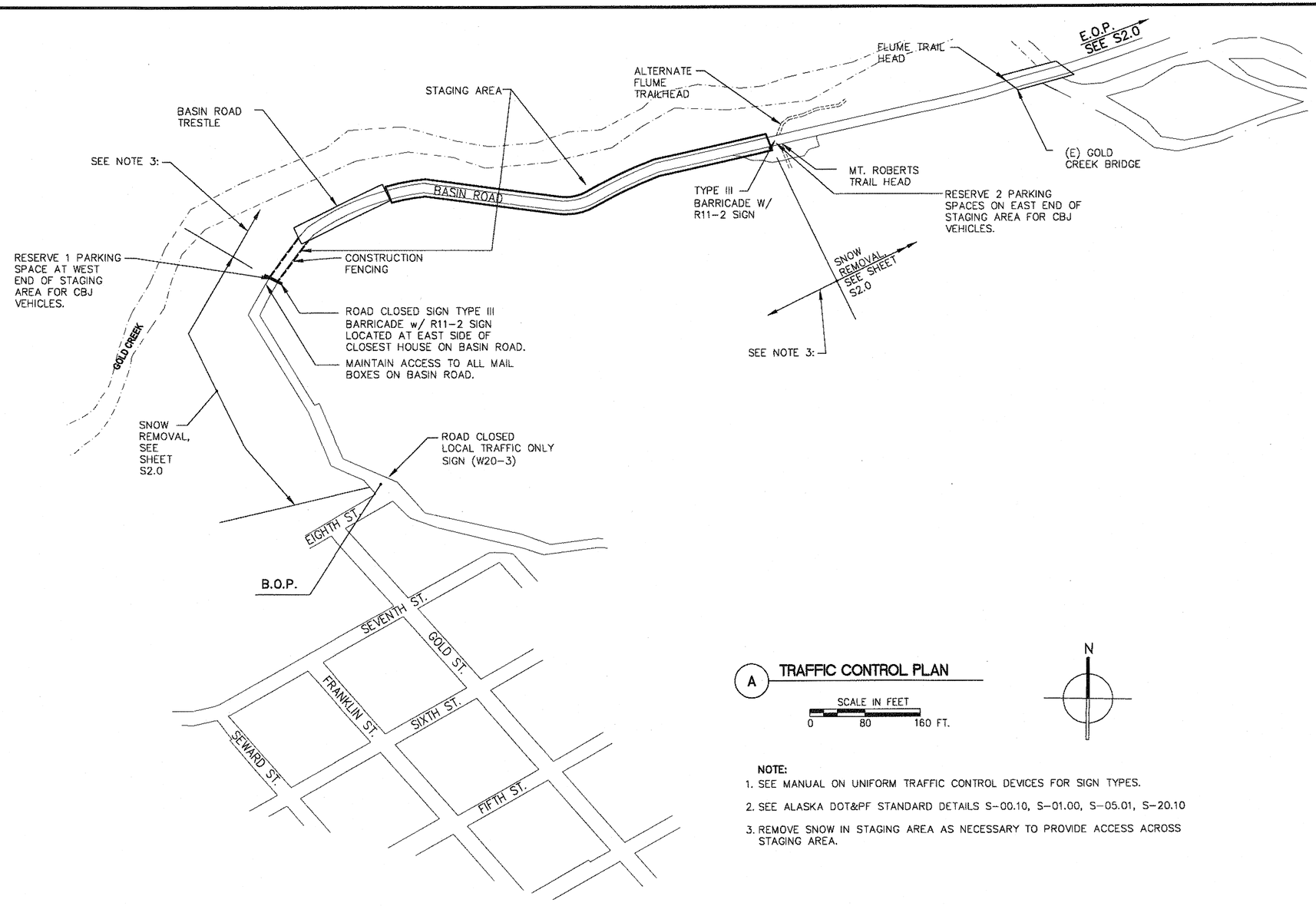

A TRAFFIC CONTROL PLAN

SCALE IN FEET
0 80 160 FT.

N

NOTE:

1. SEE MANUAL ON UNIFORM TRAFFIC CONTROL DEVICES FOR SIGN TYPES.
2. SEE ALASKA DOT&PF STANDARD DETAILS S-00.10, S-01.00, S-05.01, S-20.10
3. REMOVE SNOW IN STAGING AREA AS NECESSARY TO PROVIDE ACCESS ACROSS STAGING AREA.

JSK
81/83

DO NOT SCALE FROM THESE DRAWINGS USE DIMENSIONS

PATH: N:\09XXX\092025 BASIN ROAD TRESTLE\D-DRAWINGS\PND\FINAL DESIGN\S1.0.DWG

KATHERINE LUNDQUIST
TAB: S1.0 Monday, January 24, 2011 4:14:23 PM

ADDENDUM NUMBER

ATTACHMENT NUMBER

RECORD OF REVISIONS

No.	DATE	DESCRIPTION

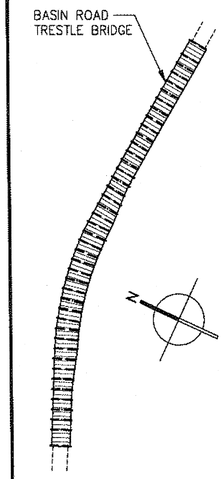

PLAN LEGEND

CHECKED BY: CMG

STATE OF ALASKA
Christopher Connitz
Jun 24, 2011
CE-7559
REGISTERED PROFESSIONAL ENGINEER

PLANS PREPARED BY PND ENGINEERS, INC.

DESIGNED BY: MDS

DRAWN BY: PJD

STATE OF ALASKA
DEPARTMENT OF TRANSPORTATION & PUBLIC FACILITIES
SOUTHEAST REGION

JUNEAU BRIDGE REPAIR & UPGRADE
BASIN ROAD TRESTLE BRIDGE NO.948

TRAFFIC CONTROL PLAN

PROJECT DESIGNATION	
68979/BR-0003(144)	
STATE	YEAR
ALASKA	2010
SHEET NUMBER	TOTAL SHEETS
S1.0	58

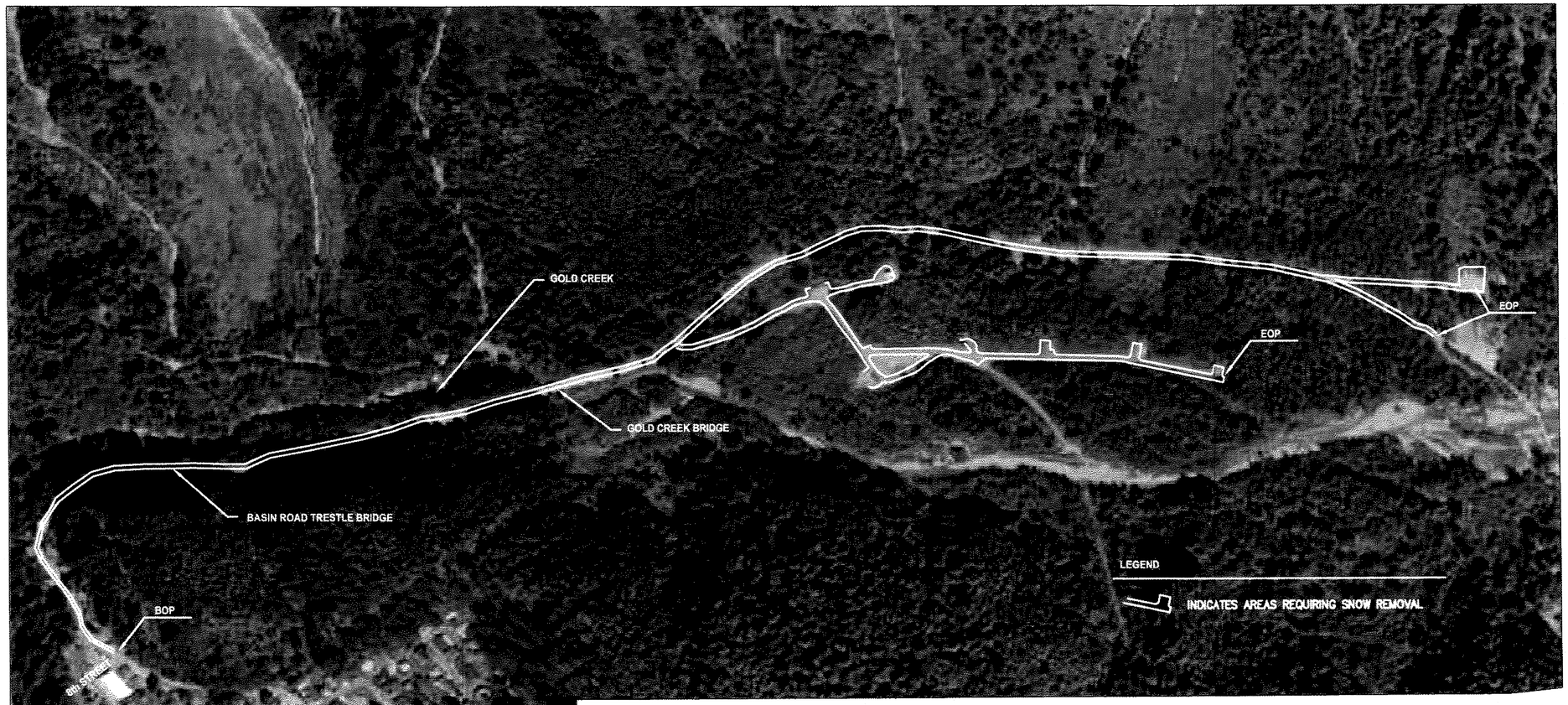

A SNOW REMOVAL PLAN

SCALE IN FEET
0 200 400 FT.

N

NOTE:
MEET WITH CBJ WATER DEPARTMENT TO REVIEW EXISTING EQUIPMENT AND STRUCTURES THAT ARE NOT TO BE DISTURBED.

JSK
82/83

DO NOT SCALE FROM THESE DRAWINGS USE DIMENSIONS

PATH:N:\09XXX\092025 BASIN ROAD TRESTLE\D-DRAWINGS\PND\FINAL DESIGN\S2.0.DWG

KATHERINE LUNDQUIST
TAB: S2.0 Monday, January 24, 2011 3:43:18 PM

ADDENDUM NUMBER

ATTACHMENT NUMBER

RECORD OF REVISIONS

No.	DATE	DESCRIPTION

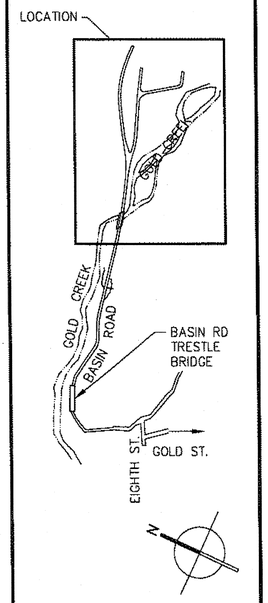

PLAN LEGEND

CHECKED BY: CMG

STATE OF ALASKA
Christopher Gianotti
Jan 24, 2011
CE-7309
REGISTERED PROFESSIONAL ENGINEER

PLANS PREPARED BY PND ENGINEERS, INC.

DESIGNED BY: MDS

DRAWN BY: PJD

STATE OF ALASKA
DEPARTMENT OF TRANSPORTATION
& PUBLIC FACILITIES
SOUTHEAST REGION

JUNEAU BRIDGE REPAIR & UPGRADE
BASIN ROAD TRESTLE BRIDGE NO.948

PLOWING PLAN

PROJECT DESIGNATION	
68979/BR-0003(144)	
STATE	YEAR
ALASKA	2010
SHEET NUMBER	TOTAL SHEETS
S2.0	58

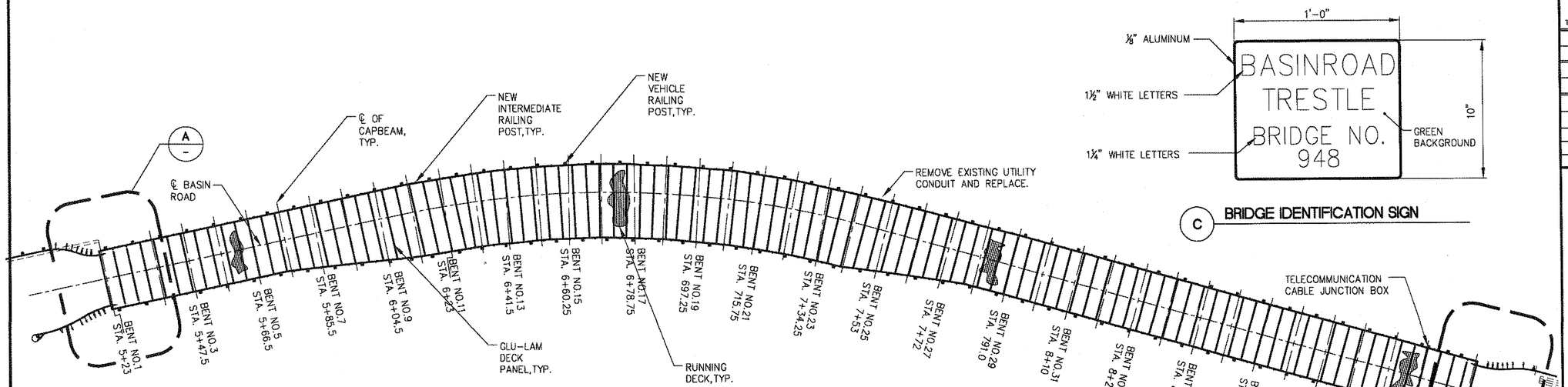

NOTE:
1. RAILING, STRINGERS AND CAP BEAMS NOT SHOWN FOR CLARITY.

1 SIGNAGE PLAN

SCALE IN FEET
0 5 10 FT.

C BRIDGE IDENTIFICATION SIGN

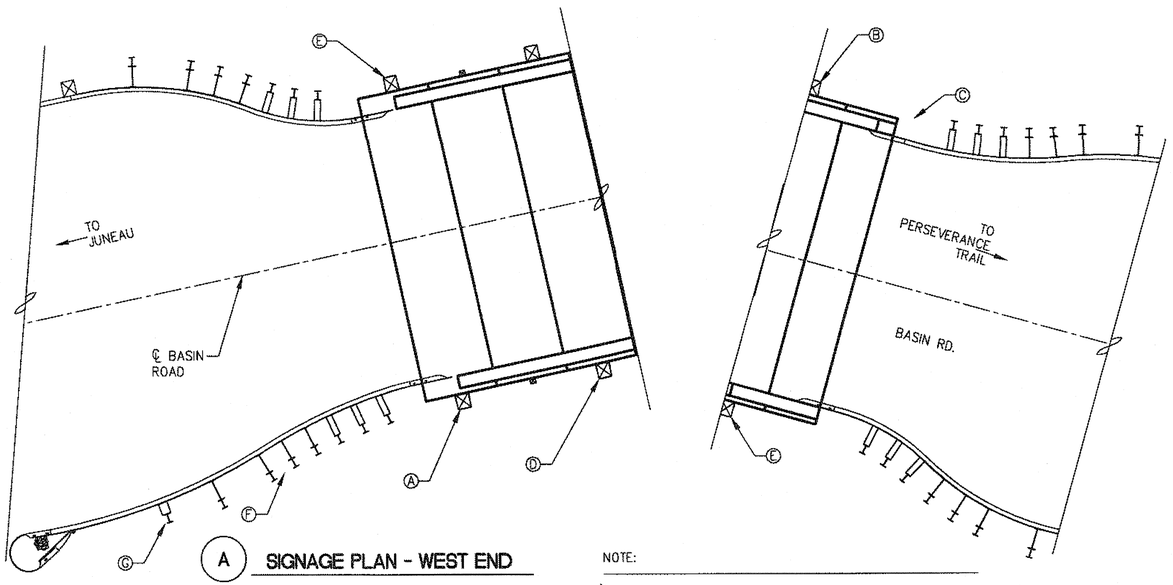

A SIGNAGE PLAN - WEST END

B SIGNAGE PLAN - EAST END

NOTE:
Ⓧ INDICATES APPROXIMATE LOCATION OF SIGNAGE, SEE TABLE FOR CORRESPONDING SIGN.

WORK SUMMARY

MARK	SIGN TYPE	SIGN DESCRIPTION	EXISTING	SALVAGE & RESET	NEW
Ⓐ	–	CITY DRINKING WATER	X	X	
	–	BASIN ROAD TRESTLE BRIDGE NO. 948			X
	OM-3R	OBSTRUCTION MARKER			X
Ⓑ	OM-3R	OBSTRUCTION MARKER			X
	R2-1	5 MPH SPEED LIMIT	X	X	
Ⓒ	–	BASIN ROAD TRESTLE BRIDGE NO. 948			X
Ⓓ	R2-1	5 MPH SPEED LIMIT	X	X	
Ⓔ	OM-3L	OBSTRUCTION MARKER			X
Ⓕ	R7-1	NO PARKING/FALLING ROCKS	X	X	
Ⓖ	W16-110	AVALANCHE WARNING	X	X	

NOTE:
1. SEE MANUAL ON UNIFORM TRAFFIC CONTROL DEVICES FOR SIGN TYPE.
2. SEE STANDARD DOT DETAILS (S20.10) FOR SIGN MOUNTING, AND POST EMBEDMENT (S30.03).

JSK
83/83

DO NOT SCALE FROM THESE DRAWINGS USE DIMENSIONS

PATH: N:\09XXX\092025 BASIN ROAD TRESTLE\D-DRAWINGS\PND\FINAL DESIGN\S3.0.DWG
KATHERINE LUNDQUIST
TAB: S3.0 Monday, January 24, 2011 3:43:46 PM

ADDENDUM NUMBER
ATTACHMENT NUMBER

RECORD OF REVISIONS

No.	DATE	DESCRIPTION

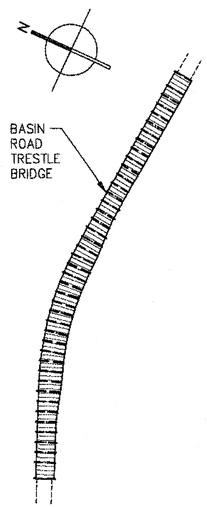

PLAN LEGEND

CHECKED BY: CMG

STATE OF ALASKA
Christopher Gianotti
Jan 24, 2011
CE-7559
REGISTERED PROFESSIONAL ENGINEER

PLANS PREPARED BY PND ENGINEERS, INC.
DESIGNED BY: MDS
DRAWN BY: PJD

STATE OF ALASKA
DEPARTMENT OF TRANSPORTATION & PUBLIC FACILITIES
SOUTHEAST REGION

JUNEAU BRIDGE REPAIR & UPGRADE
BASIN ROAD TRESTLE BRIDGE NO.948

BRIDGE SIGNAGE PLAN

PROJECT DESIGNATION	
68979/BR-0003(144)	
STATE	YEAR
ALASKA	2010
SHEET NUMBER	TOTAL SHEETS
S3.0	58